STATE OF LOUISIANA
COASTAL PROTECTION AND RESTORATION AUTHORITY

CAMERON CREOLE MAINTENANCE PROJECT
STORM DAMAGE REPAIRS

PROJECT NO. CS-004-A
CAMERON PARISH, LOUISIANA

SHEET INDEX

1	TITLE SHEET
2A-2B	GENERAL NOTES
3	PROJECT SCOPE OF WORK AND ESTIMATED PROJECT QUANTITIES
4	PROJECT VICINITY MAP
5	PROPOSED ACCESS ROUTES
6	MANGROVE BAYOU PROJECT AREA MAP
7	MANGROVE BAYOU WCS OUTLET CHANNEL PLAN/PROFILE
8	PROPOSED MANGROVE BAYOU WCS OUTLET CHANNEL CROSS SECTIONS
9	EXISTING MANGROVE BAYOU PLUG PLAN/PROFILE
10	PROPOSED MANGROVE BAYOU PLUG PLAN/PROFILE
11	MANGROVE BAYOU PLUG CROSS SECTIONS
12	GRAND BAYOU PROJECT AREA MAP
13	EXISTING GRAND BAYOU PLUG PLAN/PROFILE
14	PROPOSED GRAND BAYOU PLUG PLAN/PROFILE
15	GRAND BAYOU PLUG CROSS SECTIONS
16	EXISTING GRAND BAYOU BREACH PLAN/PROFILE
17	PROPOSED GRAND BAYOU BREACH PLAN/PROFILE
18	GRAND BAYOU BREACH CROSS SECTIONS
19	GRAND BAYOU BREACH DETAILS
20	EXISTING GRAND BAYOU WCS PLAN/PROFILE
21	PROPOSED GRAND BAYOU WCS PLAN/PROFILE
22	GRAND BAYOU WCS CROSS SECTIONS
23	MECHANICAL REPAIRS TO GRAND BAYOU WCS ELEVATION VIEW
24	MECHANICAL REPAIRS TO GRAND BAYOU WCS - BUOY ASSEMBLY AND REPLACEMENT
25	LAMBERT BAYOU PROJECT AREA MAP
26	EXISTING LAMBERT BAYOU BREACH PLAN/PROFILE
27	PROPOSED LAMBERT BAYOU BREACH PLAN/PROFILE
28	LAMBERT BAYOU BREACH CROSS SECTIONS
29	LAMBERT BAYOU BREACH DETAILS
30	MECHANICAL REPAIRS TO LAMBERT BAYOU WCS
31	NO NAME BAYOU PROJECT AREA MAP
32	EXISTING NO NAME BAYOU WCS PLAN/PROFILE
33	PROPOSED NO NAME BAYOU WCS PLAN/PROFILE
34	NO NAME BAYOU WCS CROSS SECTIONS
35	MECHANICAL REPAIRS TO NO NAME BAYOU WCS
36	EXISTING NO NAME BAYOU BREACH PLAN/PROFILE
37	PROPOSED NO NAME BAYOU BREACH PLAN/PROFILE
38	NO NAME BAYOU BREACH CROSS SECTIONS
39	GRAND BAYOU FLAP GATE REPAIR DETAILS
40	GRAND BAYOU SLUICE / DROP GATE REPAIR DETAILS
41	STEEL SHEET AND BATTER PILE ASSEMBLY DETAILS
42	STEEL SHEET AND BATTER PILE ASSEMBLY DETAILS
43	STEEL SHEET AND BATTER PILE ASSEMBLY DETAILS
44	LAMBERT BAYOU WCS WEST-SIDE BUMPER DETAILS
45	GUARD RAIL AND ANCHOR BRACKET DETAILS

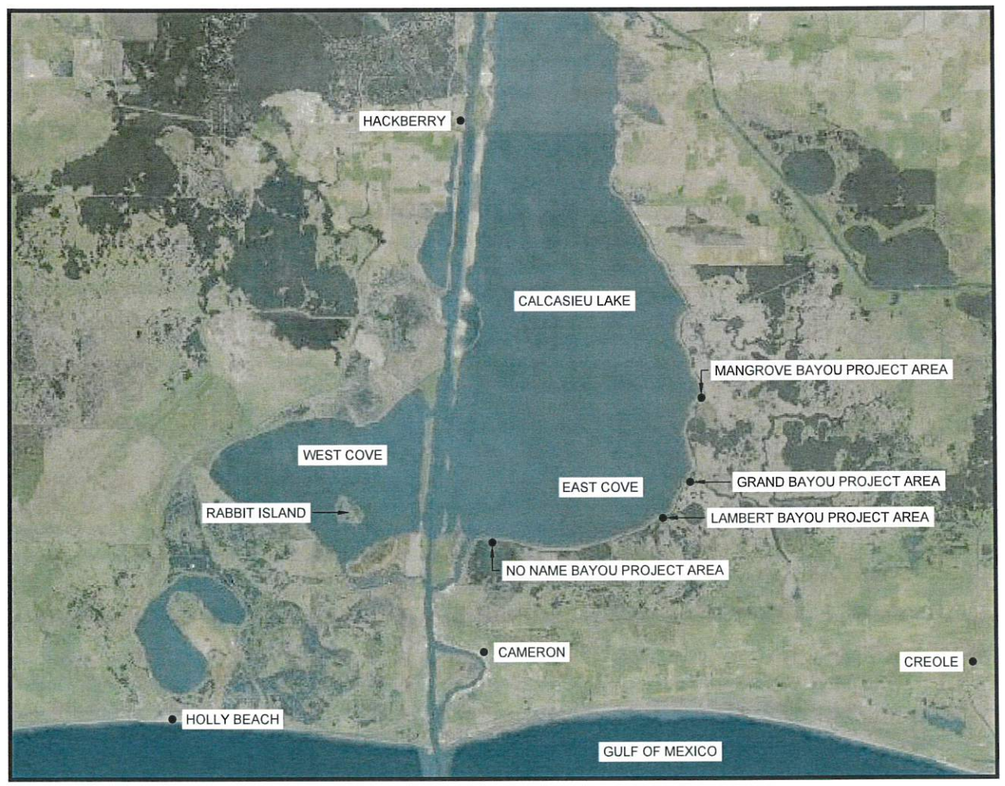

N

20,000' 10,000' 0' 20,000' 40,000'

STATE OF LOUISIANA
INSET MAP

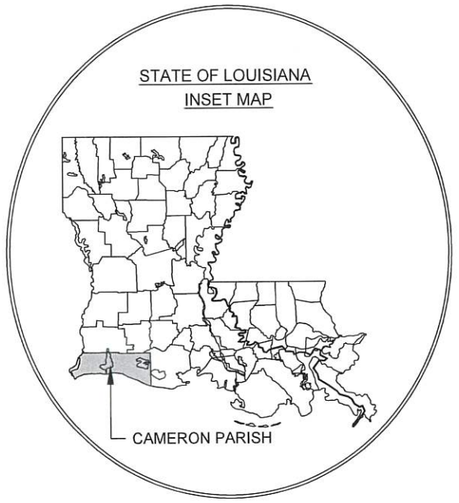

LICENSURE CLASSIFICATION REQUIREMENTS

MAJOR CLASSIFICATION: HEAVY CONSTRUCTION AND/OR COASTAL RESTORATION AND HABITAT ENHANCEMENT.

COASTAL PROTECTION AND RESTORATION AUTHORITY
CPRA

STATE OF LOUISIANA
BEAU J. TATE
License No. 30990
PROFESSIONAL ENGINEER
4/3/23

REV.	DATE	DESCRIPTION	BY
2	01/27/23	Final Design Drawings and Construction Plans	BB
1	11/07/22	Preliminary Design Drawings	BB

ROYAL engineering consultants
1231 Camellia Boulevard
Lafayette, Louisiana 70508

COASTAL PROTECTION AND RESTORATION AUTHORITY
150 TERRACE AVENUE
BATON ROUGE, LOUISIANA 70802

TITLE SHEET

DESIGNED BY: BB
APPROVED BY: BT

CAMERON CREOLE MAINTENANCE PROJECT
STORM DAMAGE REPAIRS

STATE PROJECT NUMBER: CS-004-A
DRAWN BY: REC

DATE: NOV. 07, 2022

SCOPE OF WORK:

THESE PLANS ARE FOR THE STORM DAMAGE REPAIRS TO FEATURES OF THE CAMERON-CREOLE WATERSHED THAT WERE DAMAGED DURING HURRICANE LAURA.

CONTRACTOR WILL VISIT THE SITE OF EACH DAMAGED PROJECT FEATURE PRIOR TO BID AND REVIEW THE PLANS & SPECIFICATIONS OF THE WORK AT THE PROJECT SITE. THE DAMAGED PROJECT FEATURES INCLUDE FOUR WATER CONTROL STRUCTURES (MANGROVE BAYOU WCS, GRAND BAYOU WCS, LAMBERT BAYOU WCS, AND NO NAME BAYOU WCS), THREE LEVEE BREACH STRUCTURES (GRAND BAYOU BREACH, LAMBERT BAYOU BREACH, AND NO NAME BAYOU BREACH), AND TWO INTERIOR CANAL PLUGS (MANGROVE BAYOU PLUG AND GRAND BAYOU PLUG).

DESIGN NOTES:

DESIGN FOR THIS PROJECT IS BASED OFF OF THE TOPOGRAPHIC AND INFRASTRUCTURE SURVEY, CONDUCTED ON JUNE 28 - 29, 2022, AND JULY 6 - 7, 2022, BY T. BAKER SMITH, LLC.

MEAN HIGH WATER (MHW) ELEVATION OF 1.3' AND MEAN LOW WATER (MLW) ELEVATION OF 0.3' WERE CALCULATED FROM CRMS GAGES 0644, 1738, AND 1743 IN THE CAMERON-CREOLE WATERSHED.

DESIGN CRITERIA: ALL PROPOSED WORK SHOWN IN THE PLANS IS INTENDED TO PRODUCE A "LIKE-KIND" PRODUCT OF WHAT ONCE EXISTED PRIOR TO HURRICANE LAURA

GENERAL NOTES:

1. PLANS AND SPECIFICATIONS ARE COMPLEMENTARY; WHAT IS REQUIRED BY ONE IS BINDING AS IF REQUIRED BY ALL. CLARIFICATIONS AND INTERPRETATIONS OF, OR NOTIFICATIONS OF MINOR VARIATIONS AND DEVIATIONS IN THE CONTRACT DOCUMENTS, WILL BE ISSUED BY THE ENGINEER.
2. THESE NOTES ARE PART OF ALL DRAWINGS THAT REFER TO THEM AND SHALL GOVERN ALL CONSTRUCTION AND ASSOCIATED ACTIVITIES INCLUDING BUT NOT LIMITED TO THE SITE WORK AND RIP RAP, EXCAVATION & DEBRIS REMOVAL WORK, SHEETPILE AND PILE WORK, STEEL WORK, WELDING WORK, AND MECHANICAL REPAIR WORK FOR THE CAMERON-CREOLE MAINTENANCE PROJECT (CS-004-A) - STORM DAMAGE REPAIRS. IF THERE IS A CONFLICT BETWEEN THE DRAWINGS, THESE NOTES, AND THE PROJECT SPECIFICATIONS, THE DRAWINGS SHALL TAKE PRECEDENCE.
3. "ENGINEER" REFERS TO THE ENGINEER OF RECORD.
4. DRAWINGS MAY NOT REPRESENT ALL HAZARDS WITHIN PROJECT AREA.
5. CONTRACTOR SHALL PERFORM A PRECON SITE VISIT PRIOR TO THE START OF CONSTRUCTION. DURING THE PRECON SITE VISIT THE CONTRACTOR SHALL FIELD VERIFY THE SITE CONDITIONS AND ELEVATIONS AS WELL AS THE DIMENSIONS OF ALL EXISTING AND PROPOSED ITEMS RELATING TO THIS WORK AND THE PLANS. CONTRACTOR SHALL NOTIFY THE ENGINEER OF ANY DISCREPANCIES OR CONFLICTS PRIOR TO BEGINNING WORK, ORDERING AND/OR FABRICATING MATERIALS AND FEATURES, AND PREPARING SHOP DRAWINGS. FAILURE TO DO SO, OR ANY DEVIATION FROM THE DRAWINGS WITHOUT APPROVAL OF THE ENGINEER BECOMES THE SOLE RESPONSIBILITY OF THE CONTRACTOR.
6. ALL ELEVATIONS ARE GIVEN IN THE NORTH AMERICAN VERTICAL DATUM OF 1988 (NAVD88), GEOID12A, U.S. SURVEY FEET. ALL HORIZONTAL COORDINATES ARE GIVEN IN THE NORTH AMERICAN DATUM OF 1983 (NAD83) LOUISIANA STATE PLANE SOUTH ZONE U.S. FEET.
7. CONTRACTOR SHALL ACCESS PROJECT SITE FROM A NAVIGABLE WATER BODY.
8. ACCESS ROUTES ILLUSTRATED IN THE DRAWINGS ARE PROPOSED ONLY. DISTURBANCE OF WATER BOTTOMS, INCLUDING BUT NOT LIMITED TO EXISTING OYSTER REEFS, IS NOT PERMITTED ALONG ANY ROUTE THE CONTRACTOR CHOOSES TO USE FOR ACCESS TO THE PROJECT SITE. CONTRACTOR IS REQUIRED TO VERIFY THAT WATER DEPTHS ALONG ANY ACCESS ROUTES THEY CHOOSE TO USE FOR THIS PROJECT, WHETHER PROPOSED IN THE DRAWINGS OR NOT, ARE ADEQUATE IN ORDER TO AVOID ANY WATER BOTTOM DISTURBANCE DURING MOBILIZATION/DEMOBILIZATION OF MATERIALS AND EQUIPMENT, AND DURING INTERMITTENT TRAVEL TO AND FROM THE SITE. CONTRACTOR SHALL ASSUME FULL RESPONSIBILITY FOR ANY WATER BOTTOM DISTURBANCE THAT OCCURS OUTSIDE OF THE AREAS PERMITTED FOR EXCAVATION AND FILL ACTIVITIES AS ILLUSTRATED AND STATED IN THE DRAWINGS.
9. LAKE CALCASIEU AND CAMERON-CREOLE WATERSHED WATER SURFACES VARY WITH METEOROLOGICAL AND TIDAL CONDITIONS. CONTRACTOR SHALL FAMILIARIZE HIMSELF WITH VARYING TIDAL CONDITIONS AND ACCOUNT FOR SUCH WORK IN A WORK PLAN.
10. WHEEL WASHING/PROP WASHING SHALL NOT BE PERMITTED.
11. ANY DAMAGE TO EXISTING U.S. COAST GUARD NAVIGATION AIDS OR PRIVATE NAVIGATION AIDS SHALL BE REPAIRED BY THE CONTRACTOR TO U.S. COAST GUARD STANDARDS AT THE EXPENSE OF THE CONTRACTOR.
12. PROJECT IS WITHIN AND ADJACENT TO ENVIRONMENTALLY SENSITIVE AREAS. CONTRACTOR SHALL AVOID/MINIMIZE IMPACTS TO THESE AREAS DURING THE COURSE OF WORK. OWNER RESERVES THE RIGHT TO SUSPEND WORK AT ANY TIME IF IMPACTS OCCUR UNTIL SATISFACTORY CORRECTIVE MEASURES ARE IMPLEMENTED BY CONTRACTOR TO THE SATISFACTION OF REGULATORY AGENCIES AND/OR CAMERON PARISH.
13. CONTRACTOR SHALL MAKE HIS OWN ARRANGEMENTS FOR,
    - OBTAINING ANY/ALL ACCESS/CONSTRUCTION PERMITS, AND PAY ALL ASSOCIATED FEES REQUIRED TO PERFORM CONSTRUCTION AND ASSOCIATED ACTIVITIES ON APPLICAPBLE NATIONAL WILDLIFE REFUGE PROPERTIES.
    - OBTAINING PERMISSIONS FROM APPLICABLE PROPERTY OWNERS, AND PAY ALL ASSOCIATED FEES FOR STAGING, FABRICATION, AND LOADING BARGES ON PRIVATE PROPERTY.

    UPON SIGNING CONSTRUCTION CONTRACT, CONTRACTOR ACCEPTS RESPONSIBILITY FOR ACQUISITION OF ALL PERMISSIONS, AUTHORIZATIONS, EASEMENTS, AND/OR ACCESS AGREEMENTS NECESSARY FOR CONSTRUCTION OF THIS PROJECT.
14. REGULATORY AUTHORIZATIONS OBTAINED BY THE OWNER ARE INCLUDED IN APPENDIX F OF THE SPECIFICATIONS. ANY DISCREPANCIES BETWEEN THESE DOCUMENTS AND THE CONSTRUCTION DOCUMENTS SHALL BE IMMEDIATELY REPORTED TO THE ENGINEER. ALL OTHER REGULATORY AUTHORIZATIONS ARE THE RESPONSIBILITY OF THE CONTRACTOR.
15. STRUCTURES ARE DESIGNED FOR "IN PLACE" LOADS. THE CONTRACTOR SHALL PROVIDE ADEQUATE TEMPORARY BRACING DURING CONSTRUCTION AND EQUIPMENT ERECTION. THE CONTRACTOR SHALL BE RESPONSIBLE FOR ANY DAMAGES INCURRED PRIOR TO COMPLETION.
16. ALL NECESSARY MATERIALS FOR COMPLETION OF THIS PROJECT TO BE FURNISHED BY THE CONTRACTOR.
17. CONTRACTOR SHALL TAKE PRECAUTIONS, SECURE EQUIPMENT, AND PROTECT THE WORK AND RELATED MATERIALS AGAINST ADVERSE WEATHER CONDITIONS REGARDLESS OF MARINE CONDITIONS.
18. ITEMS OR FEATURES NOTED AS "EXISTING" ON DRAWINGS MAY OR MAY NOT BE EXISTING.
19. OWNER RESERVES THE RIGHT TO ACCESS AND INSPECT ALL WORK.
20. CONTRACTOR MUST STAY WITHIN FOOTPRINT OF THE WORK SITE. NO EQUIPMENT OR CONSTRUCTION MATERIAL WILL BE ALLOWED OUTSIDE OF THE PROJECT SITE AT ANY TIME. AVOID IMPACT TO EXISTING VEGETATION.
21. CONSTRUCTION DEBRIS MUST BE REMOVED FROM THE PROJECT SITE BY THE CONTRACTOR AT NO DIRECT PAYMENT.
22. CONTRACTOR SHALL IDENTIFY AND MARK THE CONSTRUCTION AREA ACCORDING TO THE LINES AND GRADES AS SET FORTH IN THE PLANS. ONLY AFTER FINAL ACCEPTANCE OF THE WORK PERFORMED SHALL THE CONTRACTOR REMOVE THE STAKES. CONSTRUCTION LAYOUT SHALL BE PERFORMED AT NO DIRECT PAYMENT.

UTILITIES

23. CONTRACTOR SHALL PERFORM A HAZARD SURVEY AND LOCATE ALL UTILITIES AND OBSTRUCTIONS PRIOR TO COMMENCING WORK.
24. CONTRACTOR SHALL CONTACT LOUISIANA ONE CALL AT 1-800-272-3020 AT LEAST 5 WORKING DAYS PRIOR TO START OF CONSTRUCTION TO LOCATE EXISTING UTILITIES AT THE PROJECT SITE. LIMITS OF WORK SHALL BE PRE-MARKED FOR THE UTILITY LOCATORS.
25. IT SHALL BE THE RESPONSIBILITY OF THE CONTRACTOR TO VERIFY LOCATION AND DEPTH OF ALL EXISTING UTILITIES BEFORE STARTING CONSTRUCTION.
26. CONTRACTOR SHALL CONTACT OWNER OF ALL AFFECTED UTILITY COMPANIES AT LEAST THREE (3) WORKING DAYS PRIOR TO BEGINNING OF CONSTRUCTION AROUND THEIR RESPECTIVE UTILITIES.
27. THE CONTRACTOR SHALL BE RESPONSIBLE FOR ALL COORDINATION, SCHEDULING, AND NOTICES TO UTILITY OWNERS.
28. CONTRACTOR SHALL PROTECT EXISTING UTILITIES AT ALL TIMES DURING CONSTRUCTION. ANY DAMAGE TO EXISTING UTILITIES, WHETHER SHOWN ON THE DRAWINGS OR NOT, SHALL BE IMMEDIATELY REPORTED TO THE UTILITY ENTITIES AND WILL BE REPAIRED AT THE CONTRACTORS EXPENSE.
29. ALL WORK CONDUCTED NEAR HIGH VOLTAGE POWER LINES SHALL BE IN ACCORDANCE WITH EM385-1-1, OSHA AND ELECTRIC UTILITY REQUIREMENTS.
30. LOUISIANA LAW (LRS 45:141-146) PROHIBITS UNAUTHORIZED PERSONS FROM WORKING, INCLUDING MOVING EQUIPMENT, WITHIN 10 FEET OF ANY HIGH VOLTAGE OVERHEAD ELECTRIC UTILITY LINE, UNLESS THE FOLLOWING REQUIREMENTS ARE MET:
    - BEFORE ANY UNAUTHORIZED PERSON WORKS WITHIN 10 FEET OF ANY HIGH VOLTAGE OVERHEAD UTILITY LINE, THE PERSON RESPONSIBLE FOR THE WORK TO BE DONE MUST NOTIFY THE OWNER OR OPERATOR OF THE HIGH VOLTAGE OVERHEAD ELECTRIC UTILITY LINE NOT LESS THAN FORTY-EIGHT HOURS PRIOR TO COMMENCING WORK.
    - WORK SHALL BE PERFORMED ONLY AFTER SATISFACTORY MUTUAL AGREEMENTS HAVE BEEN COMPLETED BETWEEN THE OWNER OR OPERATOR OF THE HIGH VOLTAGE OVERHEAD ELECTRIC UTILITY LINE AND THE PERSON RESPONSIBLE FOR THE WORK TO BE DONE.
    - TO NOTIFY JEFF DAVIS ELECTRIC CO-OP PRIOR TO WORKING WITHIN 10 FEET OF A HIGH VOLTAGE OVERHEAD ELECTRIC UTILITY LINE OWNED OR OPERATED BY IT, CALL (337) 824-4330.

SURVEYS:

31. SURVEYING ACTIVITIES INCLUDING PRE-CONSTRUCTION, PROCESS, AND AS-BUILT SURVEYING SHALL BE PERFORMED AT THE PROJECT FEATURES NAMED AND IN ACCORDANCE WITH THE TECHNICAL SPECIFICATIONS, SECTION TS-210 "SURVEYS".
32. ALL COSTS ASSOCIATED WITH THE PERFORMANCE OF SURVEYS SHALL BE INCLUDED IN THE LUMP SUM PRICE FOR BID ITEM No. 2 "SURVEYS (TS-210)".
33. THE CONTRACTOR SHALL BE RESPONSIBLE FOR SURVEY(S) REQUIRED FOR PROJECT DIMENSION CONTROL.
34. THE CONTRACTOR SHALL BE RESPONSIBLE FOR LAYING OUT THE WORK AND VERIFYING ALL MEASUREMENTS AND GRADES PRIOR TO BEGINNING OF CONSTRUCTION. IT SHALL BE THE RESPONSIBILITY OF THE CONTRACTOR TO ESTABLISH THE PROJECT CENTERLINE AND OFFICIAL TEMPORARY BENCH MARKS FOR CONSTRUCTION PURPOSES.
35. THE LINES AND GRADES SHOWN ON THE PLANS MAY BE VARIED SLIGHTLY BY THE ENGINEER IN THE FIELD, INCLUDING BUT NOT LIMITED TO THE ALIGNMENT OF THE RIP RAP INSTALLATIONS AND DREDGING EXTENTS, IF CONDITIONS JUSTIFY SUCH A VARIATION OR IF THE RESULTS OF THE CONTRACTOR'S INITIAL SURVEY REFLECT CHANGES IN FIELD CONDITIONS. THE CONTRACTOR SHALL NOT BE ENTITLED TO EXTRA PAYMENT OTHER THAN WHATEVER INCREASE IN CONTRACT QUANTITIES IS INVOLVED
36. DIMENSIONS AND/OR ELEVATIONS CALLED OUT IN THE PLANS ARE APPROXIMATE. CONTRACTOR SHALL VERIFY ACTUAL DIMENSIONS AND/OR ELEVATIONS IN THE FIELD.
37. DIMENSIONS AND/OR ELEVATIONS MARKED THUS (N.T.S.) ARE NOT SHOWN TO SCALE.
38. CONTRACTOR SHALL BE FAMILIAR WITH EXISTING SOFT SOIL CONDITIONS AT THE WORK SITE. SOIL BORING LOCATIONS AND GEOTECHNICAL INFORMATION ARE PROVIDED IN APPENDIX J OF THE SPECIFICATIONS.
39. THE CONTRACTOR SHALL MAKE HIS OWN INTERPRETATION OF THE CHARACTER AND CONDITION OF THE MATERIALS WHICH WILL BE ENCOUNTERED ELSEWHERE FROM THE BORING AND CONE PENETROMETER TESTS (CPT) LOCATIONS THAT ARE PROVIDED IN APPENDIX J. THE CONTRACTOR, AT HIS OWN EXPENSE, MAY PERFORM ADDITIONAL INVESTIGATIONS, INCLUDING SURVEYS AND CPTs, AS HE DEEMS NECESSARY TO DETERMINE CONDITIONS WHICH AFFECT THE PERFORMANCE OF THE WORK.

EXCAVATIONS, DREDGING, AND DEBRIS REMOVAL

40. EXCAVATIONS INDICATED ON THE DRAWINGS SHALL CONFORM TO THE TECHNICAL SPECIFICATIONS SECTION TS-370 "EXCAVATION".
41. ALL COSTS ASSOCIATED WITH EXCAVATIONS, DREDGING, AND DEBRIS REMOVAL SHALL BE INCLUDED IN THE UNIT PRICE FOR BID ITEM No. 3 "EXCAVATION (TS-370)".
42. A MAGNETOMETER SURVEY SHALL BE DONE BY THE CONTRACTOR PRIOR TO ANY DREDGING OR EXCAVATION TAKING PLACE.
43. THE CONTRACTOR SHALL EXCAVATE SOILS AND VEGETATIVE DEBRIS TO THE LINES AND GRADES SPECIFIED ON THE PLANS. THE CONTRACTOR MUST GAIN ACCEPTANCE FROM THE ENGINEER BEFORE THE WORK WILL BE CONSIDERED COMPLETED.
44. THE CONTRACTOR SHALL DESIGN AND PROVIDE FOR ENGINEER REVIEW ANY EXCAVATIONS, COFFERDAMS, AND DEWATERING SYSTEMS NOT PROPOSED IN THE PLANS BY THE ENGINEER.

GRADED RIP RAP & WOVEN GEOTEXTILE NOTES:

45. RIP RAP INSTALLATION INDICATED ON THE DRAWINGS SHALL CONFORM TO THE TECHNICAL SPECIFICATIONS SECTION TS-700 "RIP RAP".
46. ALL COSTS ASSOCIATED WITH THE PROCUREMENT AND INSTALLATION OF RIP RAP SHALL BE INCLUDED IN THE UNIT PRICE FOR BID ITEM No. 4, 6, 8, 11, 15, 20, AND 23, "RIP RAP (TS-700)".
47. GRADED RIP RAP PLACEMENT SHALL MAXIMIZE CONTACT BETWEEN INDIVIDUAL STONES ON ALL SIDES WITH EACH STONE HAVING AT LEAST THREE POINTS OF CONTACT WITH OTHER STONES.
48. CONTRACTOR'S WORK PLAN SHALL INCLUDE QA/QC METHODS/PROCEDURES TO ENSURE THICKNESS OF THE ARMOR STONE IS PLACED WITHIN THE SPECIFIED LIMITS. IF REQUESTED BY ENGINEER, CONTRACTOR SHALL FIELD DEMONSTRATE THE PROPOSED METHOD/PROCEDURES.
49. WOVEN GEOTEXTILE FABRIC TO EXTEND 3' BEYOND PROPOSED FOOTPRINT OF THE RIP RAP BEFORE RIP RAP INSTALLED. NO PAY INCLUDED FOR OVERLAP OF GEOTEXTILE.
50. WOVEN GEOTEXTILE MATERIALS AND INSTALLATION INDICATED ON THE DRAWINGS SHALL CONFORM TO THE TECHNICAL SPECIFICATIONS SECTION TS-601 "WOVEN GEOTEXTILE FABRIC".
51. ALL COSTS ASSOCIATED WITH THE PROCUREMENT AND INSTALLATION OF WOVEN GEOTEXTILE FABRIC SHALL BE INCLUDED IN THE UNIT PRICE FOR BID ITEM No. 5, 7, 9, 12, 16, 21, AND 24, "WOVEN GEOTEXTILE FABRIC (TS-601)".
52. EXISTING BOTTOM CONSISTS OF SOFT SOILS. SOIL DISPLACEMENT MAY OCCUR UPON PLACEMENT OF GRADED RIP RAP. CONTRACTOR SHALL UTILIZE DROP HEIGHTS OF NO GREATER THAN ONE FOOT AND EMPLOY OTHER PLACEMENT TECHNIQUES TO HELP MINIMIZE SOIL DISPLACEMENT AND DAMAGE TO UNDERLYING GEOTEXTILES. UNDERLYING GEOTEXTILES SHALL EXTEND A MINIMUM OF 3 FT BEYOND EDGE OF GRADED RIP RAP PRIOR TO SETTLEMENT. CONTRACTOR SHALL CONSIDER OTHER METHODS OF MINIMIZING SOIL DISPLACEMENT SUCH AS TACKING THE EDGES OF THE GEOTEXTILE FABRIC AND GEOGRID WITH GRADED RIP RAP PRIOR TO LOADING CENTRAL PORTIONS.

STEEL NOTES:

53. ALL STRUCTURAL STEEL SHALL BE ASTM A36 UNLESS OTHERWISE NOTED.
    - W SHAPES - ASTM A992, Fy-50 ksi.
    - CHANNELS, ANGLES, AND PLATES; UNLESS NOTED OTHERWISE = ASTM A36, Fy=36ksi.
54. BOLTS IN STRUCTURAL STEEL CONNECTIONS SHALL CONFORM TO ASTM A325, UNLESS NOTED OTHERWISE.
55. PIPE 12" DIAMETER OR SMALLER SHALL BE ASTM A53 GRADE B, Fy=35ksi
56. DIMENSIONS SHOWN OR CALLED FOR ARE FINAL DIMENSIONS: ALLOWANCES MUST BE MADE FOR MACHINING.
57. TO PREVENT CORROSION BY MOISTURE BETWEEN STEEL SURFACES IN CONTACT, ALL SUCH CONTACTS SHALL BE SEALED WATER-TIGHT BY RUNNING A CONTINUOUS 1/8" FILLET WELD ALONG ALL EDGES OF THE CONTACT, UNLESS OTHERWISE NOTED. (DOES NOT INCLUDE PLATED EDGES OR MEMBER ENDS).
58. STEEL PIPES, SHEET PILES, PLATES, OR ANY STEEL MATERIAL (FABRICATED OR NON-FABRICATED) IS TO BE STORED AND HANDLED IN SUCH A MANNER THAT SAGGING OR BENDING IS AVOIDED. ALL STEEL MATERIALS TO BE STORED ON THE GROUND SHALL BE STACKED AND BLOCKED IN SUCH A WAY THAT ALL STEEL MATERIAL WILL HAVE A UNIFORM SUPPORT ALONG ITS ENTIRE LENGTH.
59. ALL WELDING SHALL BE ELECTRIC WELDING, WORKMANSHIP AND TECHNIQUE, WHERE APPLICABLE, SHALL CONFORM TO THE AMERICAN WELDING SOCIETY STRUCTURAL WELDING CODE AWS D1.1 OR LATEST VERSION THEREOF, UNLESS OTHERWISE NOTED.
60. WELDING SYMBOLS SHOWN ARE THOSE ADOPTED BY THE AMERICAN WELDING SOCIETY AND INDICATE ONLY SIZE AND TYPE OF WELDS REQUIRED. DETAILED INFORMATION SHALL BE SHOWN ON THE SHOP DRAWINGS AND SUBMITTED TO THE CONTRACTOR FOR APPROVAL.
61. STRUCTURAL STEEL FABRICATION AND ERECTION SHALL CONFORM TO THE A.I.S.C. MANUAL OF STEEL CONSTRUCTION 13TH EDITION AND API RP2A-WSD. UNLESS OTHERWISE NOTED.
62. ALL MISCELLANEOUS HARDWARE WHICH IS SPECIFIED TO BE GALVANIZED SHALL BE COATED IN ACCORDANCE WITH ASTM A-153, AFTER FABRICATION. DAMAGED GALVANIZED COATS THAT ARE NOT TO BE EMBEDDED IN MORE THAN THREE (3) INCHES OF CONCRETE SHALL BE REPAIRED WITH COLD APPLIED, ZINC RICH, ORGANIC PAINT, OR OTHER APPROVED METHOD OF REPAIR.

STATE OF LOUISIANA
BEAU J. TATE
License No. 30990
4/3/23
PROFESSIONAL ENGINEER

REV.	DATE	DESCRIPTION	BY
2	01/27/23	Final Design Drawings and Construction Plans	BB
1	11/07/22	Preliminary Design Drawings	BB

ROYAL engineering consultants
1231 Camellia Boulevard
Lafayette, Louisiana 70508

COASTAL PROTECTION AND RESTORATION AUTHORITY
150 TERRACE AVENUE
BATON ROUGE, LOUISIANA 70802

GENERAL NOTES

DESIGNED BY: BB
APPROVED BY: BT

CAMERON-CREOLE MAINTENANCE PROJECT
STORM DAMAGE REPAIRS

STATE PROJECT NUMBER: CS-004-A
DRAWN BY: REC

DATE: NOV. 07, 2022

SHEET PILE WALL STRUCTURE:

63. SHEET PILING, CAP PLATES, LUGS, NUT SEATING PLATES, WHALER BEAMS, BATTER PILES, PILE CAPS, H-PILES, AND ANY ADDITIONAL INCIDENTAL ITEMS FOR CONSTRUCTION OF SHEET PILE WALLS INDICATED ON THE DRAWINGS SHALL CONFORM TO THE TECHNICAL SPECIFICATIONS SECTIONS TS-920 "PERMANENT STEEL SHEETING", TS-921 "PILES", AND TS-980 "METALS".
64. ALL COSTS ASSOCIATED WITH THE PROCUREMENT, COATING, AND INSTALLATION OF STEEL SHEET PILING, STEEL WALER, BATTER PILES AND CAPS, H-PILES, AND ALL OTHER INCIDENTALS AS DESCRIBED AND REQUIRED BY THE TECHNICAL SPECIFICATIONS SECTIONS TS-920 "PERMANENT STEEL SHEETING", TS-921 "PILES", AND TS-980 "METALS", SHALL BE INCLUDED IN THE CONTRACT PRICE FOR BID ITEM No. 13 AND 18 "PERMANENT STEEL SHEETING (TS-920)" AND BID ITEM No. 14 AND 19 "PILES (TS-921)"
65. SHEET PILE MATERIAL SHALL CONFORM TO ASTM A572 GRADE 60.
66. SHEET PILES SHALL BE SHOP PAINTED IN ACCORDANCE WITH TECHNICAL SPECIFICATION SECTION TS-980.6. CONTRACTOR SHALL FIELD COAT ALL BARE STEEL AND WELDED CONNECTIONS WITH A 2 COAT COAL TAR EPOXY-POLYAMIDE SYSTEM IN ACCORDANCE WITH SECTION 811 OF THE LOUISIANA STANDARD SPECIFICATIONS FOR ROADS AND BRIDGES, FOLLOWING PROCEDURES OUTLINED IN TECHNICAL SPECIFICATION SECTION TS-980.6.
67. ALL LIFTING HOLES IN STEEL SHEET PILE ARE TO BE FILLED WITH 3/8" PLATE AFTER SHEETPILE HAS BEEN DRIVEN (STABBING HOLES IN PERMANENT SECTIONS OF PIPE NOT ALLOWED).
68. PILES DRIVEN OUT OF INTERLOCK WITH ADJACENT PILES OR OTHERWISE DAMAGED SHALL BE REMOVED AND REPLACED BY NEW PILES AT NO EXPENSE TO THE OWNER.
69. TOPS OF SHEET PILES SHALL BE CUT OFF OR DRIVEN TO THE STRAIGHT LINE AT THE ELEVATION INDICATED ON THE PLANS. IF THE SHEET PILES ARE APPRECIABLY DISTORTED OR OTHERWISE DAMAGED BELOW THE CUT-OFF LEVEL, DAMAGED PORTIONS SHALL BE REMOVED AND REPLACED WITH NEW PILES AT NO EXPENSE TO THE OWNER.
70. ROUND STRUCTURAL TUBES AND STEEL PIPES SHALL BE STRUCTURAL PIPE OR FABRICATED FROM STRUCTURAL PLATE. SEAMLESS OR WELDED PIPE, WITH LONGITUDINAL WELDS AND CIRCUMFERENTIAL BUTT WELDS, SHALL CONFORM TO ONE OF THE FOLLOWING:
    - API 5L PSL 1 (MILL TEST REPORTS TRACEABLE TO EACH LENGTH OF PIPE) GRADE X42,Fy=42ksi.
    - ASTM A500 GRADE B (ROUND) Fy=42ksi.
71. FABRICATED PIPE SHALL BE FABRICATED FROM ONE OF THE FOLLOWING PLATES:
    - ASTM A572 GRADE 42, Fy=42 ksi.
    - API SPEC 2H GRADE 42, Fy=42 ksi.
    - ASTM A633 GRADE A, Fy=42 ksi.
72. FABRICATED STRUCTURAL PIPE SHALL BE FABRICATED IN ACCORDANCE WITH API SPEC 2B. HYDROSTATIC TESTING MAY BE OMITTED.
73. SEE STRUCTURAL PROFILES ON SHEETS 19 AND 29 OF THE DRAWINGS FOR:
    - SHEETPILE AND PILE CUT OFF ELEVATIONS
    - SHEETPILE AND PILE TIP ELEVATIONS
74. HP-SHAPED PILES SHALL CONFORM TO ASTM A572, Fy=50 ksi.
75. PILE REQUIREMENTS FOR SIZE AND TYPE SHALL BE AS DESCRIBED ON THE PLANS AND IN THE SPECIFICATIONS.
76. CONTRACTOR SHALL PROBE AT PILE LOCATIONS TO ENSURE THAT THERE ARE NO SUBSURFACE OBSTRUCTIONS.
77. THE SURFACE OF EACH STEEL PILE, STEEL SHEET PILE, STEEL W-BEAM, AND ALL ASSOCIATED CAPS AND CONNECTIONS SHALL BE CLEANED, PRIMED, AND COATED USING TWO (2) COATS OF COAL TAR EPOXY- POLYAMIDE FROM THE TOP OF THE COMPONENT TO A POINT 10 FEET BELOW THE MUDLINE AND SHALL CONFORM TO ALL OTHER REQUIREMENTS SPECIFIED IN THE TECHNICAL SPECIFICATIONS SECTION TS-980.6.

78. MECHANICAL REPAIRS:
79. GATES, FLOATING BUOYS, FENCING, RAILINGS, STAIRS, AND ANY ADDITIONAL INCIDENTAL ITEMS FOR CONSTRUCTION OF MECHANICAL REPAIRS TO WCS INDICATED ON THE DRAWINGS SHALL CONFORM TO THE TECHNICAL SPECIFICATIONS SECTIONS TS-520 "GATES", TS-802 "FLOATING BUOYS", TS-950 "FENCING", TS-951 "RAILING", TS-952 "STAIRS", AND TS-980 "METALS".
80. ALL COSTS ASSOCIATED WITH THE PROCUREMENT AND INSTALLATION OF GATES, FLOATING BUOYS, FENCING, RAILINGS, STAIRS, AND ANY ADDITIONAL INCIDENTAL ITEMS SHALL BE INCLUDED IN THE LUMP SUM PRICE FOR BID ITEM NO. 10, 17, AND 22 "MECHANICAL REPAIRS TO WCS".
81. CONTRACTOR SHALL PERFORM A PRECON SITE VISIT PRIOR TO THE START OF CONSTRUCTION. DURING THE PRECON SITE VISIT THE CONTRACTOR SHALL FIELD VERIFY THE SITE CONDITIONS AND ELEVATIONS AS WELL AS THE DIMENSIONS OF ALL EXISTING AND PROPOSED ITEMS RELATING TO THE MECHANICAL REPAIR WORK INCLUDED IN BID ITEM No. 10, 17, AND 22 "MECHANICAL REPAIRS TO WCS" AND ILLUSTRATED IN THE PLANS. CONTRACTOR SHALL NOTIFY THE ENGINEER OF ANY DISCREPANCIES OR CONFLICTS PRIOR TO BEGINNING WORK, ORDERING AND/OR FABRICATING MATERIALS AND FEATURES, AND PREPARING SHOP DRAWINGS. FAILURE TO DO SO, OR ANY DEVIATION FROM THE DRAWINGS WITHOUT APPROVAL OF THE ENGINEER BECOMES THE SOLE RESPONSIBILITY OF THE CONTRACTOR.
82. ALL WORK SHALL BE COMPLETED IN ACCORDANCE WITH ALL APPLICABLE FEDERAL, STATE, AND LOCAL CODES AND LAWS.
83. COORDINATE WORK WITH OTHER TRADES TO MINIMIZE AND RESOLVE POTENTIAL CONFLICTS.
84. ALL WORK AND MATERIALS SHALL BE GUARANTEED IN WRITING FOR NOT LESS THAN ONE YEAR FROM PROJECT COMPLETION.
85. MANUFACTURER'S: THE DESIGN SHOWN ON THE DRAWINGS IS BASED UPON PRODUCTS OF THE MANUFACTURER SCHEDULED. PRIOR APPROVAL OF EQUAL ITEM MANUFACTURERS WILL BE ACCEPTABLE IF THE ITEM MEETS THE SCHEDULED PERFORMANCE AND COMPLIES WITH THE SPECIFICATIONS. IF ITEMS MANUFACTURED BY OTHER THAN THE BASIS OF DESIGN IS UTILIZED, THEN THE MECHANICAL CONTRACTOR SHALL BE RESPONSIBLE FOR THE COORDINATING WITH THE GENERAL CONTRACTOR AND ALL AFFECTED SUBCONTRACTORS TO ENSURE PROPER PROVISIONS FOR INSTALLATION OF THE FURNISHED EQUIPMENT. THIS COORDINATION SHALL INCLUDE, BUT IS NOT LIMITED TO, THE FOLLOWING:
    - STRUCTURAL SUPPORT FOR EQUIPMENT.
    - PIPING SIZES AND CONNECTION REQUIREMENTS.
    - THE MECHANICAL CONTRACTOR SHALL BE RESPONSIBLE FOR ALL COSTS INCURRED BY THE GENERAL CONTRACTOR, SUBCONTRACTORS, AND CONSULTANTS TO MODIFY THE STRUCTURAL PROVISIONS TO ACCEPT FURNISHED EQUIPMENT.
86. REVIEW AND APPROVAL OF SHOP DRAWINGS BY THE ENGINEER AND ARCHITECT DOES NOT RELIEVE THE CONTRACTOR FROM 100% COMPLIANCE WITH ALL ASPECTS OF THE CONTRACT DOCUMENTS.
87. PROVIDE MANUFACTURER RECOMMENDED MAINTENANCE CLEARANCES AT ALL EQUIPMENT.

BASE BID SUMMARY: CAMERON CREOLE MAINTENANCE PROJECT (CS-004-A) - STORM DAMAGE REPAIRS

Bid Item Number	Description	Quantity	Unit of Measure
1	Mobilization and Demobilization (TS-120)	1	LUMP SUM
2	Surveys (TS-210)	1	LUMP SUM
3	Excavation (TS-370) - Mangrove Bayou Outlet Channel	4,000	CY
4	Rip Rap (TS-700) - Mangrove Bayou Interior Canal Plug	490	TON
5	Woven Geotextile Fabric (TS-601) - Mangrove Bayou Interior Canal Plug	590	SY
6	Rip Rap (TS-700) - Grand Bayou Interior Canal Plug	715	TON
7	Woven Geotextile Fabric (TS-601) - Grand Bayou Interior Canal Plug	695	SY
8	Rip Rap (TS-700) - Grand Bayou Water Control Structure	170	TON
9	Woven Geotextile Fabric (TS-601) - Grand Bayou Water Control Structure	120	SY
10	Mechanical Repairs to WCS - Grand Bayou Water Control Structure	1	LUMP SUM
11	Rip Rap (TS-700) - Grand Bayou Levee Breach	3,200	TON
12	Woven Geotextile Fabric (TS-601) - Grand Bayou Levee Breach	1,215	SY
13	Permanent Steel Sheeting (TS-920) - Grand Bayou Levee Breach	4,800	SF
14	Piles (TS-921) - Grand Bayou Levee Breach	700	LF
15	Rip Rap (TS-700) - Lambert Bayou Levee Breach & Water Control Structure	2,500	TON
16	Woven Geotextile Fabric (TS-601) - Lambert Bayou Levee Breach & Water Control Structure	1,410	SY
17	Mechanical Repairs to WCS - Lambert Bayou Water Control Structure	1	LUMP SUM
18	Permanent Steel Sheeting (TS-920) - Lambert Bayou Levee Breach & Water Control Structure	3,375	SF
19	Piles (TS-921) - Lambert Bayou Levee Breach & Water Control Structure	600	LF
20	Rip Rap (TS-700) - No Name Bayou Water Control Structure	925	TON
21	Woven Geotextile Fabric (TS-601) - No Name Bayou Water Control Structure	560	SY
22	Mechanical Repairs to WCS - No Name Bayou Water Control Structure	1	LUMP SUM
23	Rip Rap (TS-700) - No Name Bayou Levee Breach	240	TON
24	Woven Geotextile Fabric (TS-601) - No Name Bayou Levee Breach	230	SY

1. THE QUANTITIES SHOWN IN THE DRAWINGS ARE FOR BID PURPOSES ONLY.
2. THE BID QUANTITIES OF EXCAVATION AND FILL IS BASED ON SURVEY DATA COLLECTED BY T. BAKER SMITH DURING JUNE AND JULY OF 2022.

STATE OF LOUISIANA
BEAU J. TATE
License No. 30990
4/3/23
PROFESSIONAL ENGINEER

REV.	DATE	DESCRIPTION	BY
2	01/27/23	Final Design Drawings and Construction Plans	BB
1	11/07/22	Preliminary Design Drawings	BB

ROYAL engineering possibilities
1231 Camellia Boulevard
Lafayette, Louisiana 70508

COASTAL PROTECTION AND RESTORATION AUTHORITY
150 TERRACE AVENUE
BATON ROUGE, LOUISIANA 70802

GENERAL NOTES

DESIGNED BY: BB
APPROVED BY: BT

CAMERON CREOLE MAINTENANCE PROJECT STORM DAMAGE REPAIRS

STATE PROJECT NUMBER: CS-004-A
DRAWN BY: REC

DATE: NOV. 07, 2022

SITEWORK MATERIAL QUANTITIES PER PROJECT FEATURE

	Mangrove Bayou		Grand Bayou			Lambert Bayou	No Name Bayou		Cumulative
	WCS Outlet Canal	Int. Canal Plug	WCS	Levee Breach	Int. Canal Plug	WCS & Levee Breach	WCS	Levee Breach	
Excavated & Hauled Offsite (CY)	4,000								**4,000**
Rock - rip rap (TONS)		490	170	3,200	715	2,500	925	240	**8,240**
Woven Geotextile Fabric (SY)		590	120	1,215	695	1,410	560	230	**4,820**
Steel Sheetpiles (SF)				4,800		3,375			**8,175**
W18 x 55 Steel Beam (LF)				80		75			**155**
Steel Batter Piles (LF)				700		600			**1,300**

BID ITEM No. 10 - SCOPE OF WORK: MECHANICAL REPAIRS TO GRAND BAYOU WCS

ACTION	QUANTITY	ITEM DESCRIPTION
1. Remove & Replace	(32) EACH	Treated timber board for lower gate -- 10.6 FT long x 6 IN wide x 3 IN thick
3. Replace	(1) EACH	Rodney Hunt FV-T treated timber flap gate (three hinge connections) OR APPROVED EQUAL -- 108 IN long x 60 IN wide
4. Remove & Replace	(4) EACH	Hand/guard-rails --Galvanized steel pipe with posts -- 2 IN dia. schedule 40 & 2 IN dia. schedule 80 (fabricated lengths will vary)
5. Remove & Replace	(8) EACH	Anchor bracket for guard rail
6. Replace	(6) EACH	Jim Buoy Mo. 4418 Industrial Float – Industrial floating buoys connected by steel cable
7. Replace	(2) EACH	Jim Buoy Mo. 3000 Regulatory Buoy/Channel Marker w/ Concrete Buoy Anchor (steel cable connection) -- Industrial floating buoys connected by steel cable

BID ITEM No. 17 - SCOPE OF WORK: MECHANICAL REPAIRS TO LAMBERT BAYOU WCS

ACTION	QUANTITY	ITEM DESCRIPTION
1. Remove & Replace	(8) EACH	Hand/guard-rails --Galvanized steel pipe with posts -- 2 IN dia. schedule 40 & 2 IN dia. schedule 80 (fabricated lengths will vary)
2. Remove & Replace	(16) EACH	Anchor bracket for guard rail
3. Remove & Replace	(1) EACH	LAPEYRE Alternating Tread Stairs (68 Degree) OR APPROVED EQUAL – Aluminum alternating tread stair w/ standard handrail --108 IN high

BID ITEM No. 22 - SCOPE OF WORK: MECHANICAL REPAIRS TO NO NAME BAYOU WCS

ACTION	QUANTITY	ITEM DESCRIPTION
1. Remove & Replace	(504) LF	Galvanized pipe (framework of the fence including top plus bottom rail and vertical posts) -- 2 IN dia.
2. Remove & Replace	(196) LF	Galvanized fence (surrounds structure) – 6 FT height w/ a chain link swing gate at each end (2 gates)
5. Remove & Replace	(16) EACH	Anchor bracket for vertical fence posts
4. Remove & Replace	(3) EACH	Hand/guard-rails --Galvanized steel pipe with posts -- 2 IN dia. schedule 40 & 2 IN dia. schedule 80 (fabricated lengths will vary)
5. Remove & Replace	(6) EACH	Anchor bracket for guard rail

NOTES:

1. THE QUANTITIES SHOWN IN THE DRAWINGS ARE FOR BID PURPOSES ONLY.
2. THE BID QUANTITIES OF EXCAVATION AND FILL IS BASED ON SURVEY DATA COLLECTED BY T. BAKER SMITH DURING JUNE AND JULY OF 2022.

STATE OF LOUISIANA
BEAU J. TATE
License No. 30990
4/3/23
PROFESSIONAL ENGINEER

REV.	DATE	DESCRIPTION	BY
2	01/27/23	Final Design Drawings and Construction Plans	BB
1	11/07/22	Preliminary Design Drawings	BB

ROYAL engineering possibilities.
1231 Camellia Boulevard
Lafayette, Louisiana 70508

COASTAL PROTECTION AND RESTORATION AUTHORITY
150 TERRACE AVENUE
BATON ROUGE, LOUISIANA 70802

PROJECT SCOPE OF WORK AND ESTIMATED PROJECT QUANTITIES

DESIGNED BY: BB
APPROVED BY: BT

CAMERON CREOLE MAINTENANCE PROJECT
STORM DAMAGE REPAIRS

STATE PROJECT NUMBER: CS-004-A
DRAWN BY: REC

DATE: NOV. 07, 2022

PROJECT LOCATION CENTERS				
Project Feature	**Northing**	**Easting**	**Latitude**	**Longitude**
Mangrove Bayou				
Water Control Structure	N: 511813.83	E: 2679523.94	29°51'47.5308" N	93°14'07.8216" W
Interior Canal Plug	N: 511401.35	E: 2679540.88	29°53'33.2300" N	93°13'51.6100" W
Grand Bayou				
Water Control Structure	N: 500749.15	E: 2677937.03	29°51'47.5300" N	93°14'07.8200" W
Interior Canal Plug	N: 499690.46	E: 2677687.86	29°51'37.0100" N	93°14'10.4499" W
Levee Breach	N: 500028.12	E: 2677674.09	29°51'40.3500" N	93°14'10.6700" W
Lambert Bayou				
Water Control Structure	N: 495461.23	E: 2674178.43	29°50'54.5700" N	93°14'49.5001" W
Levee Breach	N: 495381.85	E: 2673971.02	29°50'53.7500" N	93°14'51.8400" W
No Name Bayou				
Water Control Structure	N:492112.38	E: 2650779.42	29°50'17.4800" N	93°19'14.5200" W
Road/Levee Breach	N:492184.48	E: 2650408.97	29°50'18.1300" N	93°19'18.7400" W

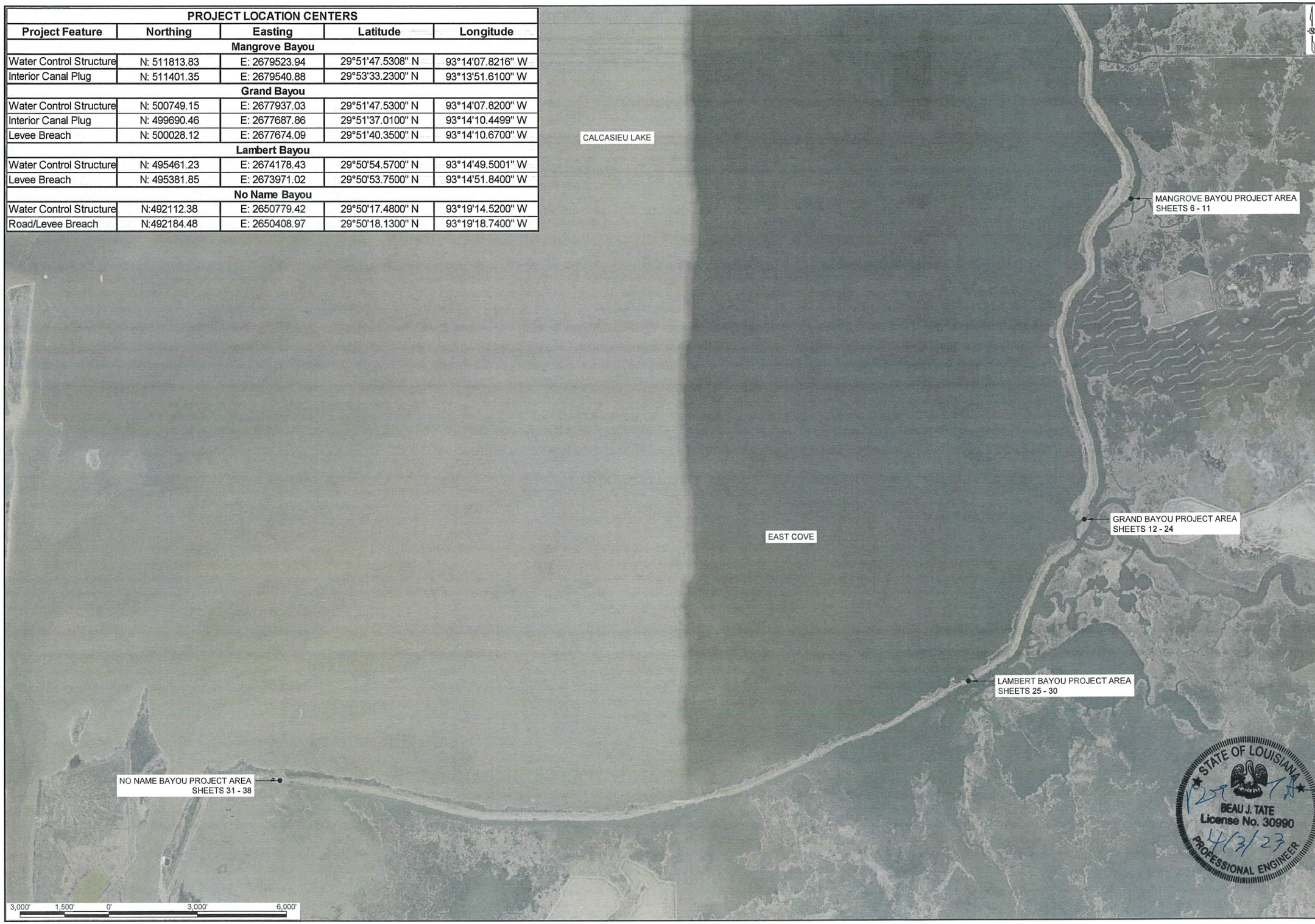

STATE OF LOUISIANA
BEAU J. TATE
License No. 30990
PROFESSIONAL ENGINEER
4/3/23

REV.	DATE	DESCRIPTION	BY
2	01/27/23	Final Design Drawings and Construction Plans	BB
1	11/07/22	Preliminary Design Drawings	BB

ROYAL engineeringprofessionals, inc.
1231 Camellia Boulevard
Lafayette, Louisiana 70508

COASTAL PROTECTION AND RESTORATION AUTHORITY
150 TERRACE AVENUE
BATON ROUGE, LOUISIANA 70802

PROJECT VICINITY MAP

DESIGNED BY: BB
APPROVED BY: BT

CAMERON CREOLE MAINTENANCE PROJECT
STORM DAMAGE REPAIRS

STATE PROJECT NUMBER: CS-004-A
DRAWN BY: REC

DATE: NOV. 07, 2022

SHEET 4 OF 45

Point Number	Northing	Easting	Latitude	Longitude	Description
Proposed Construction Access Routes (Marine)					
PT NO. 1	N: 506122.38	E: 2644112.44	29°52'35.00"	-93°20'33.00"	Begin Access Route NO. 1
PT NO. 2	N: 505686.70	E: 2669462.63	29°52'35.00"	-93°15'45.00"	End Access Route NO. 1
PT NO. 3	N: 512526.83	E: 2676986.69	29°53'43.95"	-93°14'20.83"	Intermediate Route NO. 2
PT NO. 4	N: 499932.82	E: 2674357.92	29°51'38.86"	-93°14'48.30"	Intermediate Route NO. 3
PT NO. 5	N: 496342.98	E: 2660434.90	29°51'01.00"	-93°17'25.72"	Intermediate Route NO. 4
PT NO. 6	N: 511979.67	E: 2679056.28	29°53'38.87"	-93°13'57.22"	End Access Route NO. 2
PT NO. 7	N: 500731.48	E: 2677456.65	29°51'47.27"	-93°14'13.27"	End Access Route NO. 3a
PT NO. 8	N: 495558.22	E: 2673990.86	29°50'55.49"	-93°14'51.65"	End Access Route NO. 3b
PT NO. 9	N: 494502.39	E: 2650631.43	29°50'41.11"	-93°19'16.67"	Intermediate Route NO. 4
PT NO. 10	N: 493712.14	E: 2650587.63	29°50'33.28"	-93°19'17.01"	Intermediate Route NO. 4
PT NO. 11	N: 492630.96	E: 2650800.03	29°50'22.62"	-93°19'14.39"	End Access Route NO. 4

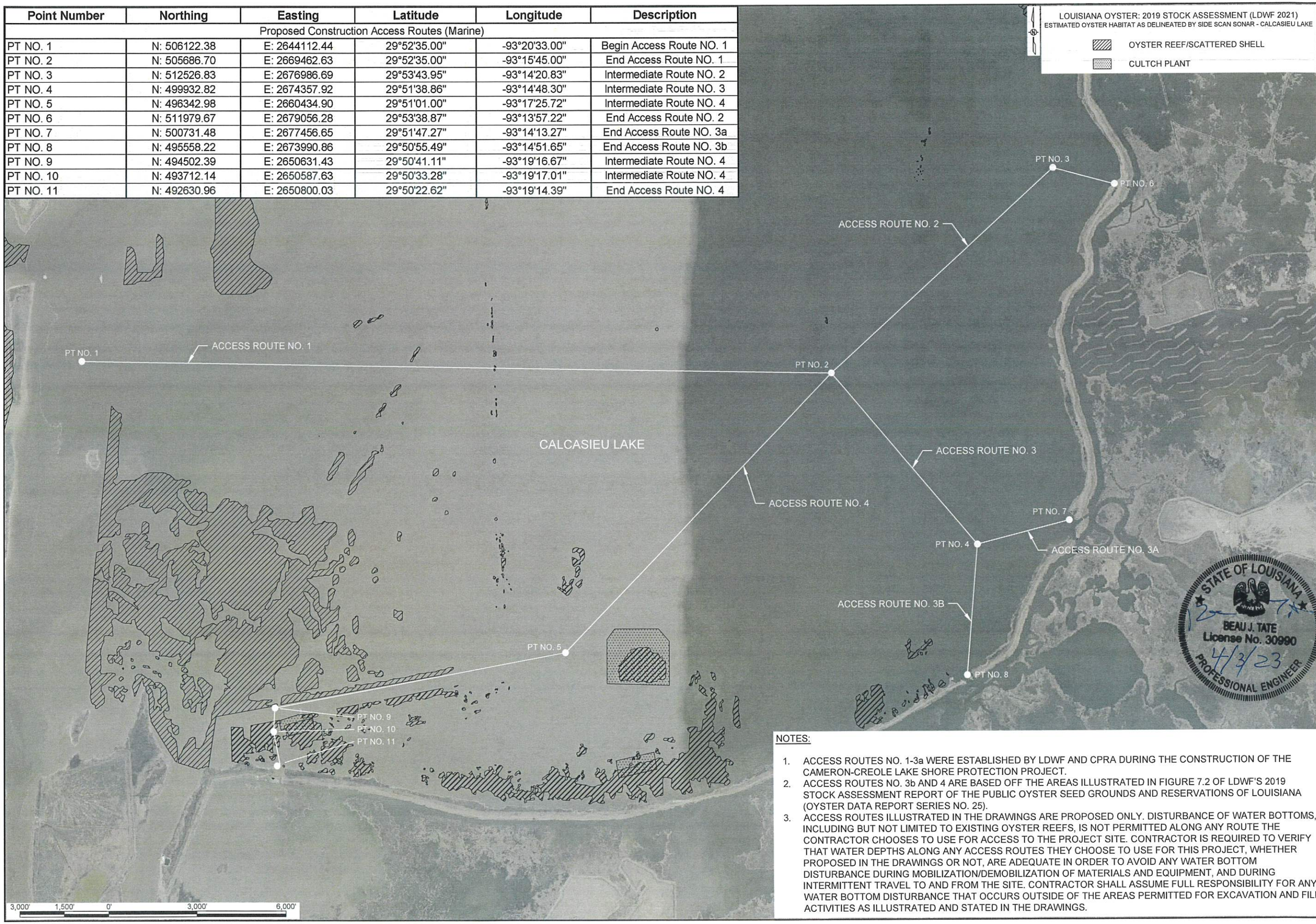

NOTES:

1. ACCESS ROUTES NO. 1-3a WERE ESTABLISHED BY LDWF AND CPRA DURING THE CONSTRUCTION OF THE CAMERON-CREOLE LAKE SHORE PROTECTION PROJECT.
2. ACCESS ROUTES NO. 3b AND 4 ARE BASED OFF THE AREAS ILLUSTRATED IN FIGURE 7.2 OF LDWF'S 2019 STOCK ASSESSMENT REPORT OF THE PUBLIC OYSTER SEED GROUNDS AND RESERVATIONS OF LOUISIANA (OYSTER DATA REPORT SERIES NO. 25).
3. ACCESS ROUTES ILLUSTRATED IN THE DRAWINGS ARE PROPOSED ONLY. DISTURBANCE OF WATER BOTTOMS, INCLUDING BUT NOT LIMITED TO EXISTING OYSTER REEFS, IS NOT PERMITTED ALONG ANY ROUTE THE CONTRACTOR CHOOSES TO USE FOR ACCESS TO THE PROJECT SITE. CONTRACTOR IS REQUIRED TO VERIFY THAT WATER DEPTHS ALONG ANY ACCESS ROUTES THEY CHOOSE TO USE FOR THIS PROJECT, WHETHER PROPOSED IN THE DRAWINGS OR NOT, ARE ADEQUATE IN ORDER TO AVOID ANY WATER BOTTOM DISTURBANCE DURING MOBILIZATION/DEMOBILIZATION OF MATERIALS AND EQUIPMENT, AND DURING INTERMITTENT TRAVEL TO AND FROM THE SITE. CONTRACTOR SHALL ASSUME FULL RESPONSIBILITY FOR ANY WATER BOTTOM DISTURBANCE THAT OCCURS OUTSIDE OF THE AREAS PERMITTED FOR EXCAVATION AND FILL ACTIVITIES AS ILLUSTRATED AND STATED IN THE DRAWINGS.

REV.	DATE	DESCRIPTION	BY
2	01/27/23	Final Design Drawings and Construction Plans	BB
1	11/07/22	Preliminary Design Drawings	BB

STATE OF LOUISIANA
BEAU J. TATE
License No. 30990
4/3/23
PROFESSIONAL ENGINEER

ROYAL engineering possibilities
1231 Camellia Boulevard
Lafayette, Louisiana 70508

COASTAL PROTECTION AND RESTORATION AUTHORITY
150 TERRACE AVENUE
BATON ROUGE, LOUISIANA 70802

PROPOSED ACCESS ROUTE

DESIGNED BY: BB
APPROVED BY: BT

CAMERON CREOLE MAINTENANCE PROJECT
STORM DAMAGE REPAIRS

STATE PROJECT NUMBER: CS-004-A
DRAWN BY: REC

DATE: NOV. 07, 2022

SHEET 5 OF 45

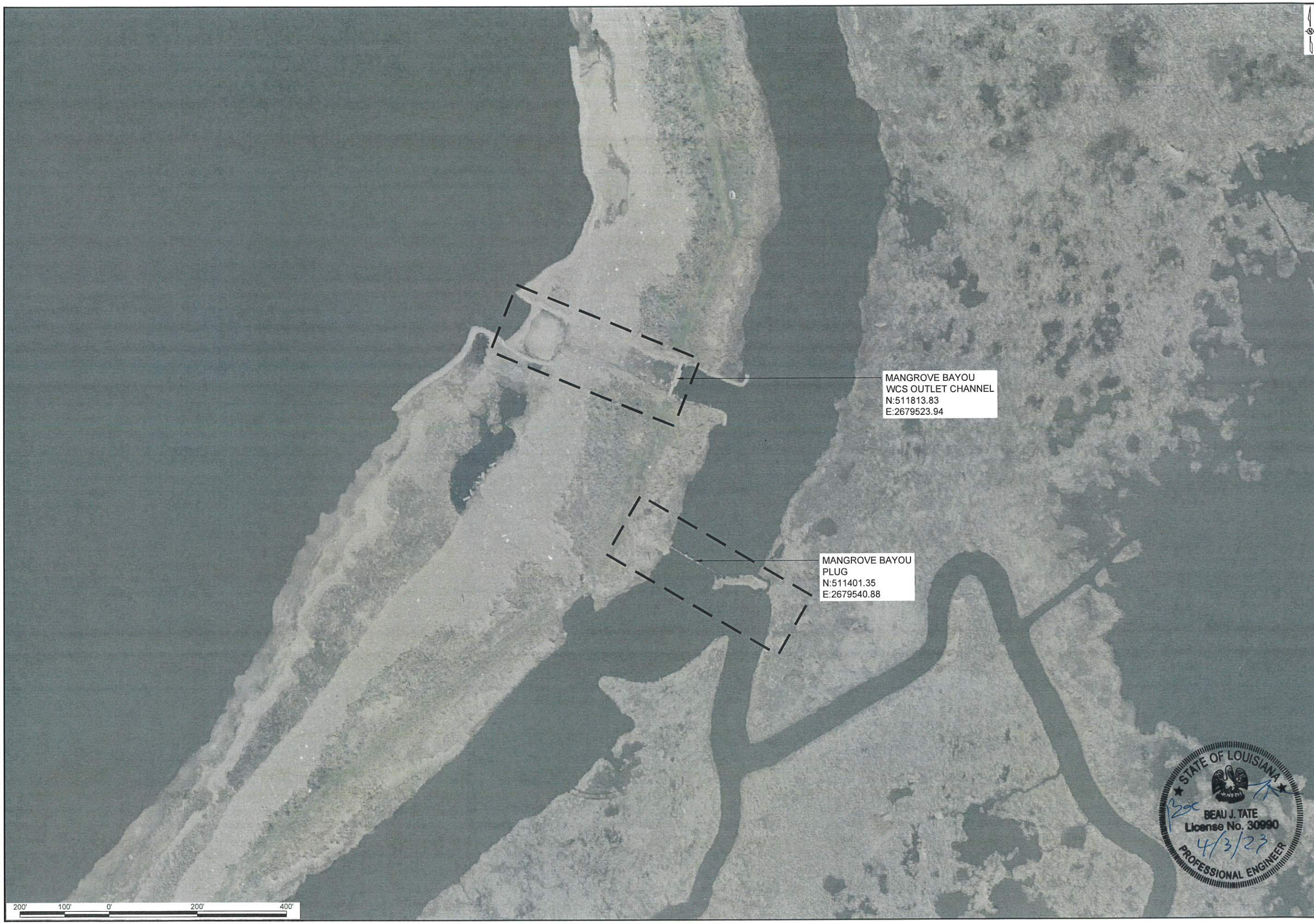

STATE OF LOUISIANA
BEAU J. TATE
License No. 30990
4/3/23
PROFESSIONAL ENGINEER

REV.	DATE	DESCRIPTION	BY
2	01/27/23	Final Design Drawings and Construction Plans	BB
1	11/07/22	Preliminary Design Drawings	BB

ROYAL engineeringpossibilities
1231 Camellia Boulevard
Lafayette, Louisiana 70508

COASTAL PROTECTION AND RESTORATION AUTHORITY
150 TERRACE AVENUE
BATON ROUGE, LOUISIANA 70802

MANGROVE BAYOU PROJECT AREA MAP

DESIGNED BY: BB
APPROVED BY: BT

CAMERON CREOLE MAINTENANCE PROJECT
STORM DAMAGE REPAIRS

STATE PROJECT NUMBER: CS-004-A
DRAWN BY: REC

DATE: NOV. 07, 2022

SHEET 6 OF 45

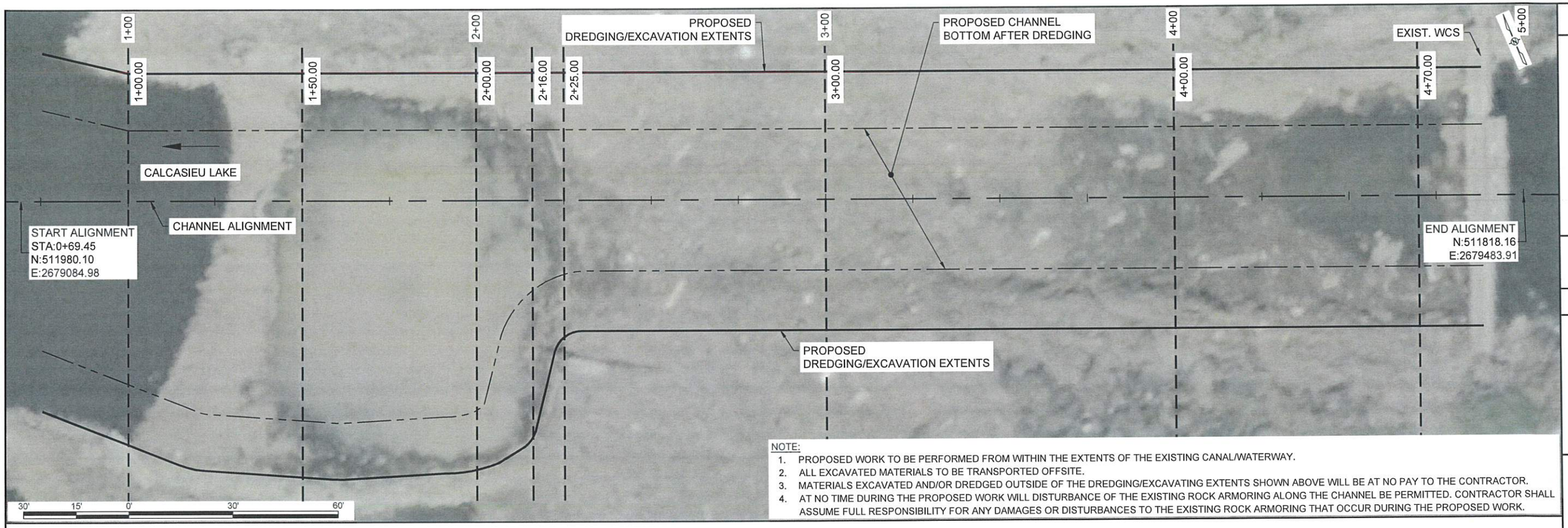

NOTE:
1. PROPOSED WORK TO BE PERFORMED FROM WITHIN THE EXTENTS OF THE EXISTING CANAL/WATERWAY.
2. ALL EXCAVATED MATERIALS TO BE TRANSPORTED OFFSITE.
3. MATERIALS EXCAVATED AND/OR DREDGED OUTSIDE OF THE DREDGING/EXCAVATING EXTENTS SHOWN ABOVE WILL BE AT NO PAY TO THE CONTRACTOR.
4. AT NO TIME DURING THE PROPOSED WORK WILL DISTURBANCE OF THE EXISTING ROCK ARMORING ALONG THE CHANNEL BE PERMITTED. CONTRACTOR SHALL ASSUME FULL RESPONSIBILITY FOR ANY DAMAGES OR DISTURBANCES TO THE EXISTING ROCK ARMORING THAT OCCUR DURING THE PROPOSED WORK.

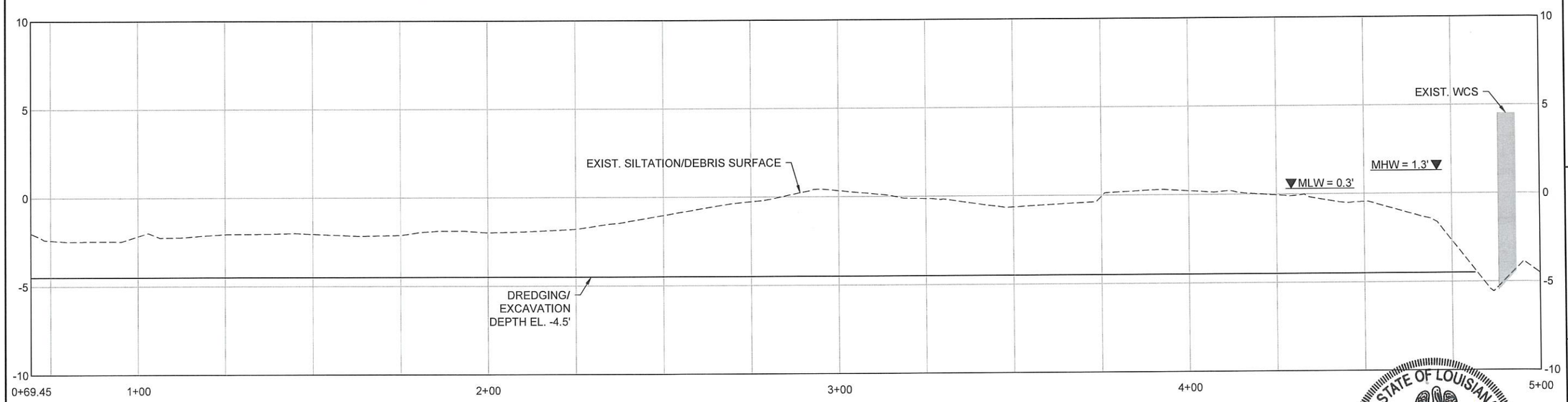

HORIZONTAL GRAPHIC SCALE
30' 15' 0' 30' 60'
6' 3' 0' 6' 12'
VERTICAL GRAPHIC SCALE

STATE OF LOUISIANA
BEAU J. TATE
License No. 30990
4/3/23
PROFESSIONAL ENGINEER

REV.	DATE	DESCRIPTION	BY
2	01/27/23	Final Design Drawings and Construction Plans	BB
1	11/07/22	Preliminary Design Drawings	BB

ROYAL engineering possibilities
1231 Camellia Boulevard
Lafayette, Louisiana 70508

COASTAL PROTECTION AND RESTORATION AUTHORITY
150 TERRACE AVENUE
BATON ROUGE, LOUISIANA 70802

MANGROVE BAYOU WCS OUTLET PLAN/PROFILE

DESIGNED BY: BB
APPROVED BY: BT

CAMERON CREOLE MAINTENANCE PROJECT STORM DAMAGE REPAIRS

STATE PROJECT NUMBER: CS-004-A
DRAWN BY: REC

DATE: NOV. 07, 2022

SHEET 7 OF 45

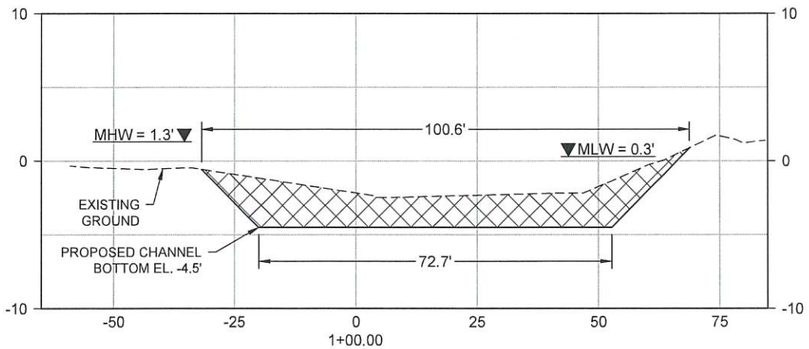

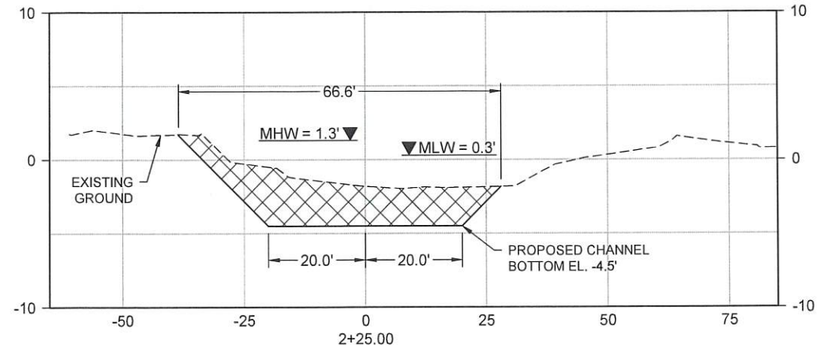

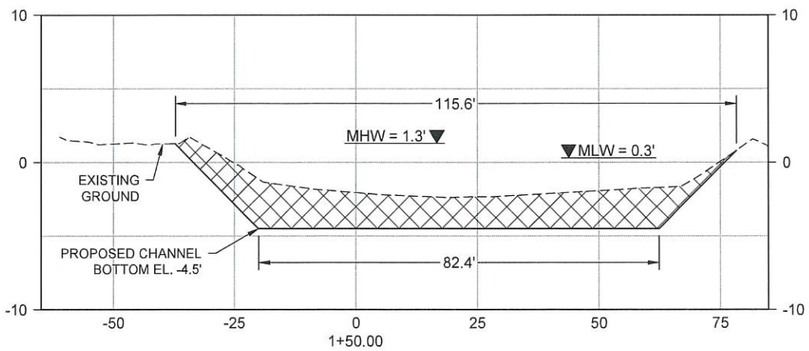

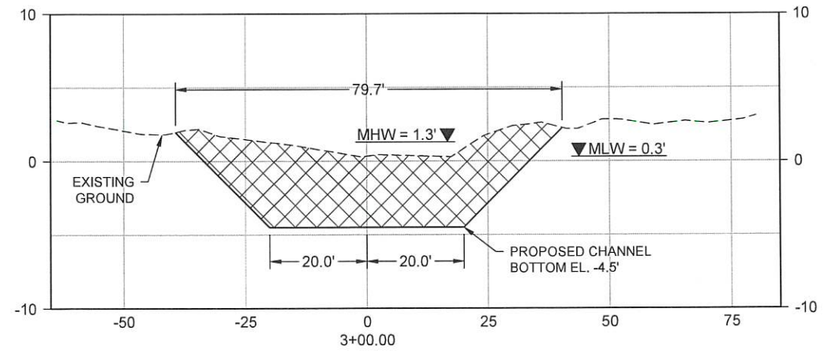

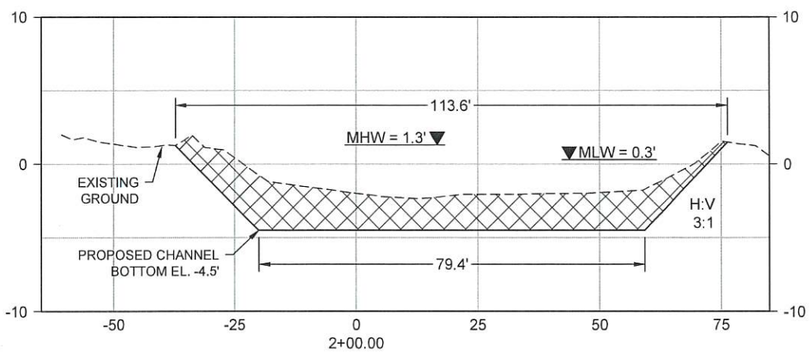

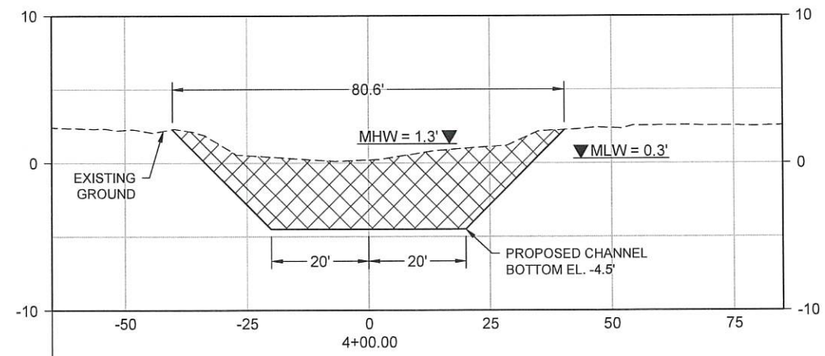

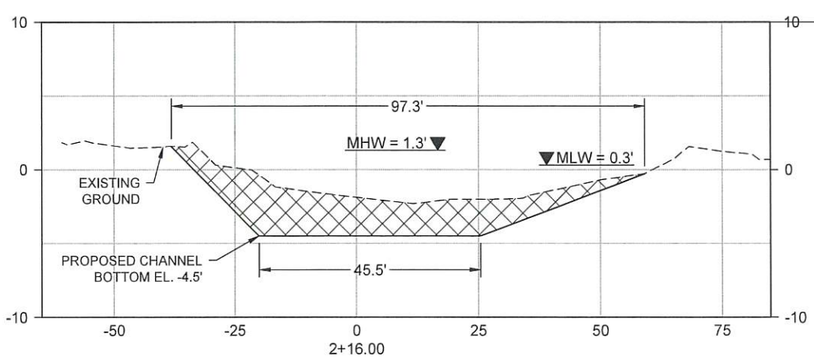

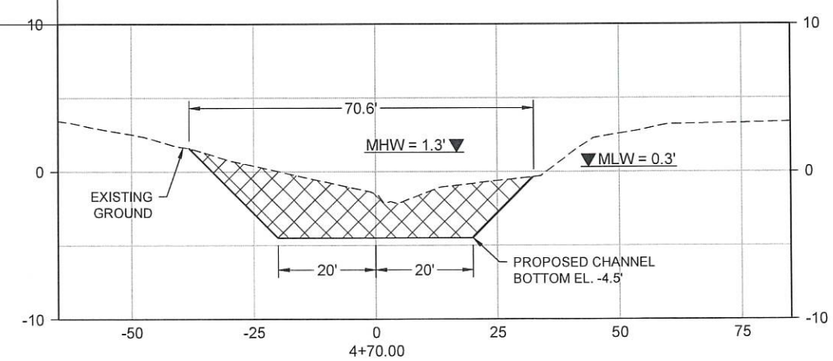

NOTES:

1. THE BID QUANTITY OF EXCAVATION IS BASED ON SURVEY DATA COLLECTED BY T.BAKER SMITH DURING JUNE AND JULY OF 2022. SEE SHEET 3 FOR QUANTITIES.
2. ALL EXCAVATED MATERIALS TO BE TRANSPORTED OFFSITE BY CONTRACTOR.
3. SIDE-SLOPE OF DREDGING EXTENTS IS 3:1 H:V UNLESS NOTED OTHERWISE.
4. MATERIALS EXCAVATED AND/OR DREDGED OUTSIDE OF THE DREDGING/EXCAVATING EXTENTS WILL BE AT NO PAY TO THE CONTRACTOR.

LEGEND:

PROPOSED MATERIALS TO BE DREDGED/EXCAVATED

STATE OF LOUISIANA
BEAU J. TATE
License No. 30990
4/3/23
PROFESSIONAL ENGINEER

HORIZONTAL GRAPHIC SCALE
30' 15' 0' 30' 60'
10' 5' 0' 10' 20'
VERTICAL GRAPHIC SCALE

REV.	DATE	DESCRIPTION	BY
2	01/27/23	Final Design Drawings and Construction Plans	BB
1	11/07/22	Preliminary Design Drawings	BB

ROYAL engineering possibilities.
1231 Camellia Boulevard
Lafayette, Louisiana 70508

COASTAL PROTECTION AND RESTORATION AUTHORITY
150 TERRACE AVENUE
BATON ROUGE, LOUISIANA 70802

PROPOSED MANGROVE BAYOU WCS OUTLET CROSS SECTIONS

DESIGNED BY: BB
APPROVED BY: BT

CAMERON CREOLE MAINTENANCE PROJECT
STORM DAMAGE REPAIRS

STATE PROJECT NUMBER: CS-004-A
DRAWN BY: REC

DATE: NOV. 07, 2022

SHEET 8 OF 45

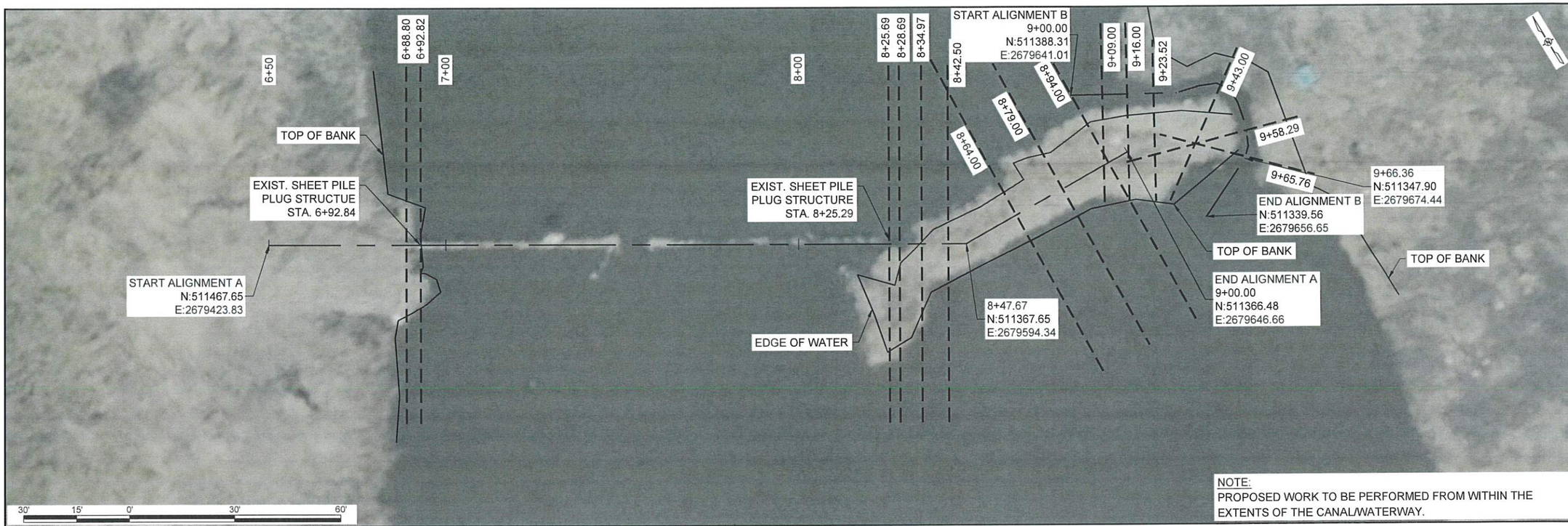

NOTE:
PROPOSED WORK TO BE PERFORMED FROM WITHIN THE EXTENTS OF THE CANAL/WATERWAY.

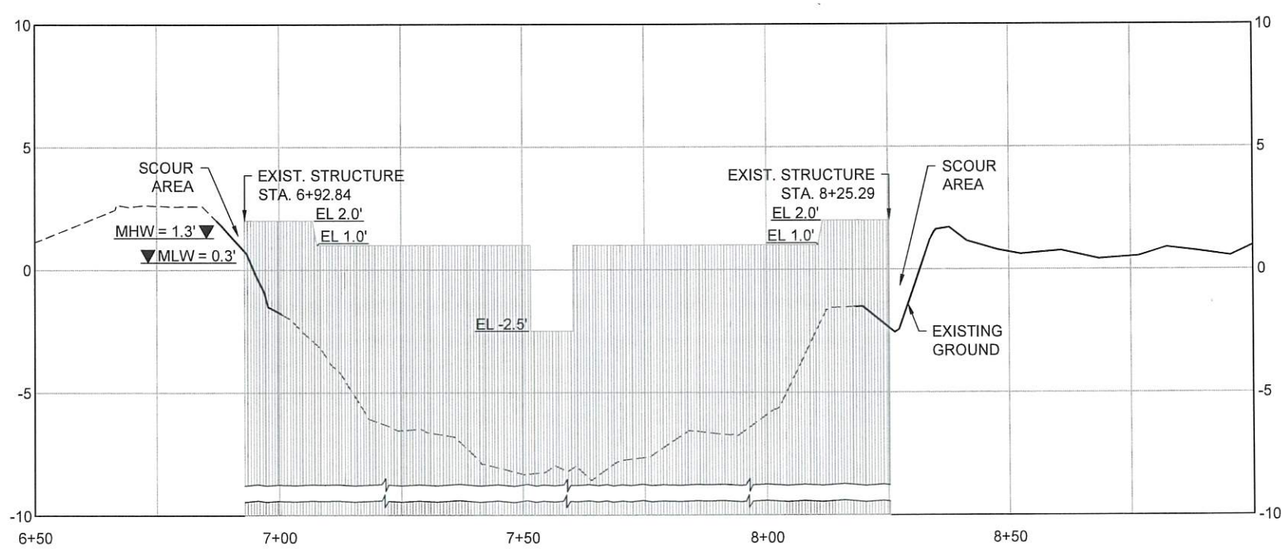

ALIGNMENT A

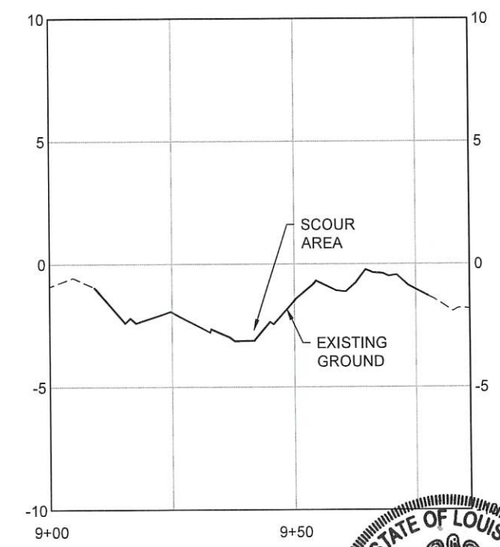

ALIGNMENT B

HORIZONTAL GRAPHIC SCALE
30' 15' 0' 30' 60'
6' 3' 0' 6' 12'
VERTICAL GRAPHIC SCALE

STATE OF LOUISIANA
BEAU J. TATE
License No. 30980
4/3/23
PROFESSIONAL ENGINEER

REV.	DATE	DESCRIPTION	BY
2	01/27/23	Final Design Drawings and Construction Plans	BB
1	11/07/22	Preliminary Design Drawings	BB

ROYAL engineering consultants
1231 Camellia Boulevard
Lafayette, Louisiana 70508

COASTAL PROTECTION AND RESTORATION AUTHORITY
150 TERRACE AVENUE
BATON ROUGE, LOUISIANA 70802

EXISTING MANGROVE BAYOU PLUG PLAN/PROFILE

DESIGNED BY: BB
APPROVED BY: BT

CAMERON-CREOLE MAINTENANCE PROJECT
STORM DAMAGE REPAIRS

STATE PROJECT NUMBER: CS-004-A
DRAWN BY: REC

DATE: NOV. 07, 2022

SHEET 9 OF 45

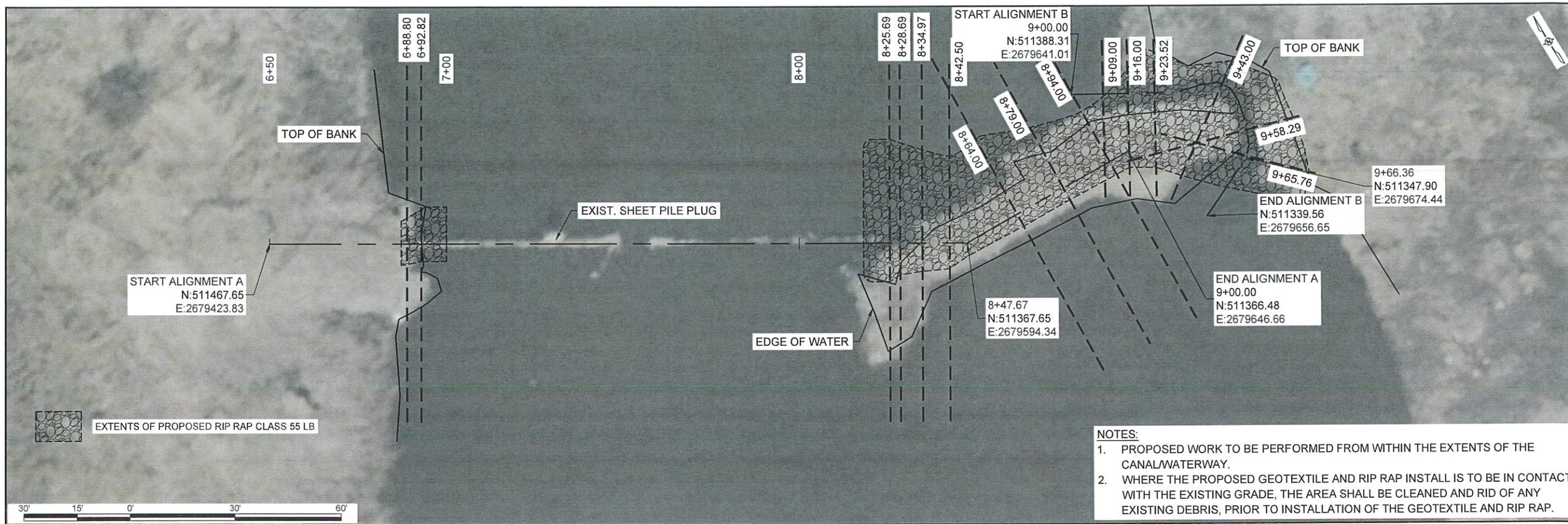

NOTES:

1. PROPOSED WORK TO BE PERFORMED FROM WITHIN THE EXTENTS OF THE CANAL/WATERWAY.
2. WHERE THE PROPOSED GEOTEXTILE AND RIP RAP INSTALL IS TO BE IN CONTACT WITH THE EXISTING GRADE, THE AREA SHALL BE CLEANED AND RID OF ANY EXISTING DEBRIS, PRIOR TO INSTALLATION OF THE GEOTEXTILE AND RIP RAP.

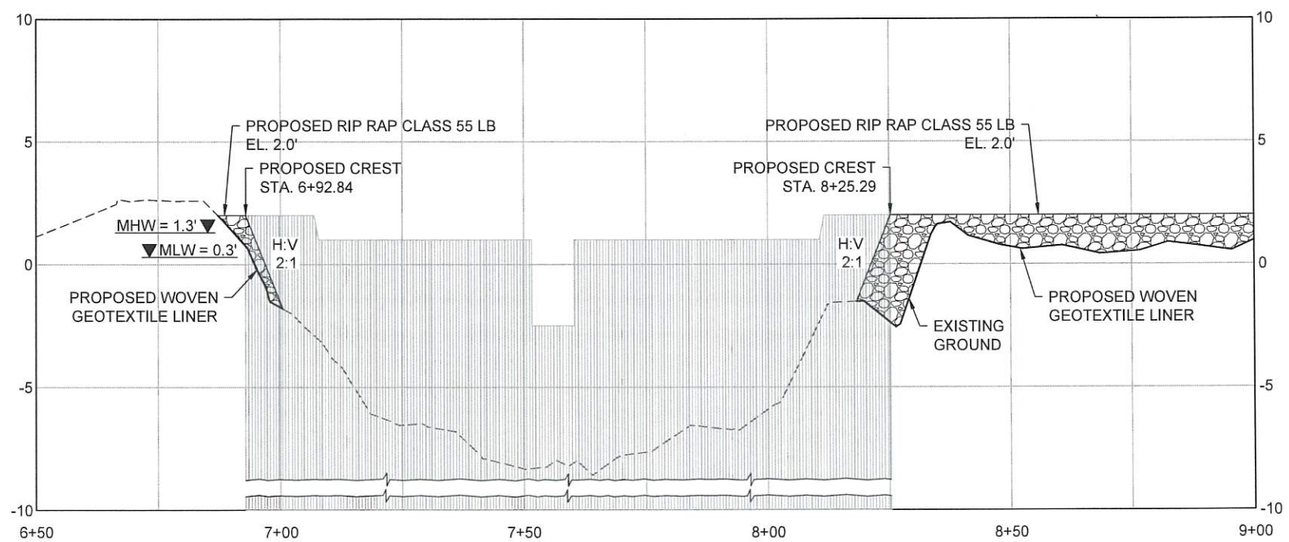

ALIGNMENT A

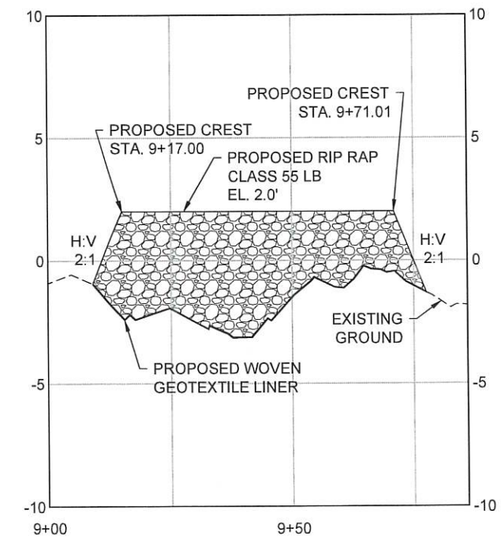

ALIGNMENT B

STATE OF LOUISIANA
BEAU J. TATE
License No. 30990
4/3/23
PROFESSIONAL ENGINEER

HORIZONTAL GRAPHIC SCALE
30' 15' 0' 30' 60'
6' 3' 0' 6' 12'
VERTICAL GRAPHIC SCALE

REV.	DATE	DESCRIPTION	BY
2	01/27/23	Final Design Drawings and Construction Plans	BB
1	11/07/22	Preliminary Design Drawings	BB

ROYAL engineering possibilities.
1231 Camellia Boulevard
Lafayette, Louisiana 70508

COASTAL PROTECTION AND RESTORATION AUTHORITY
150 TERRACE AVENUE
BATON ROUGE, LOUISIANA 70802

PROPOSED MANGROVE BAYOU PLUG PLAN/PROFILE

DESIGNED BY: BB
APPROVED BY: BT

CAMERON CREOLE MAINTENANCE PROJECT
STORM DAMAGE REPAIRS

STATE PROJECT NUMBER: CS-004-A
DRAWN BY: REC

DATE: NOV. 07, 2022

SHEET 10 OF 45

ALIGNMENT A

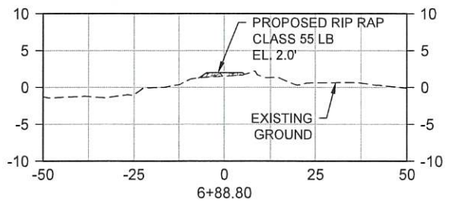

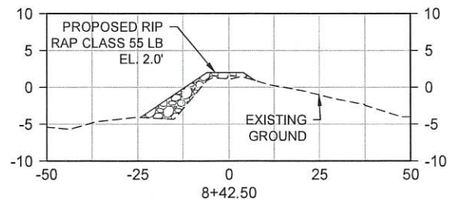

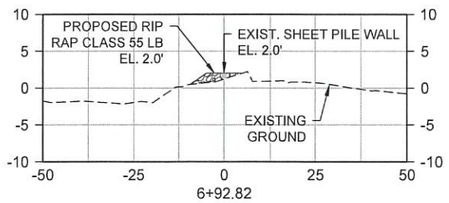

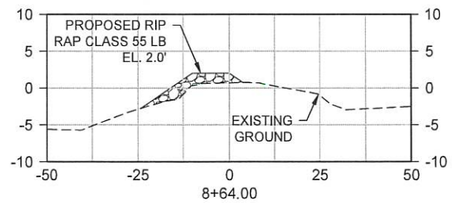

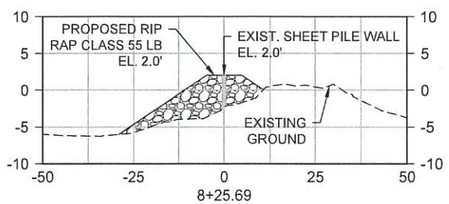

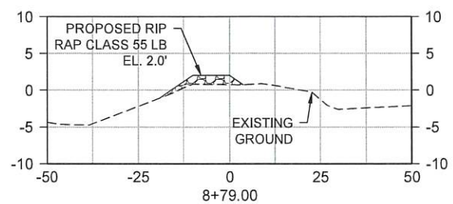

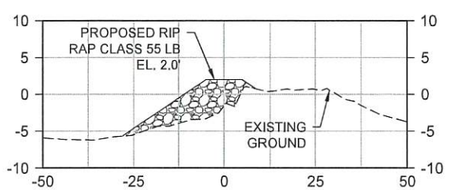

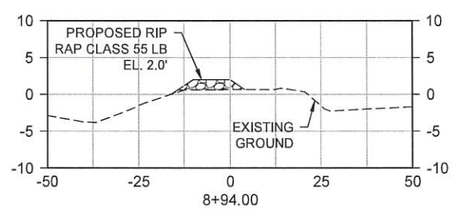

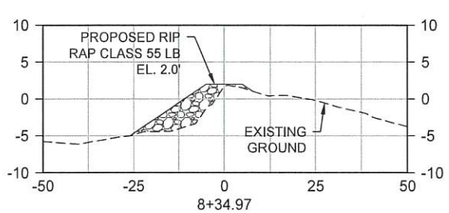

ALIGNMENT B

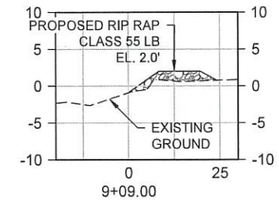

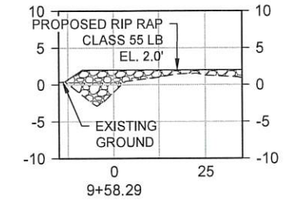

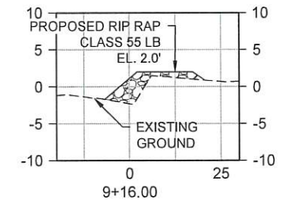

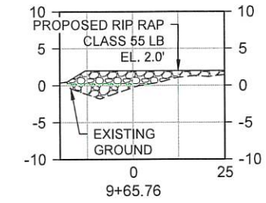

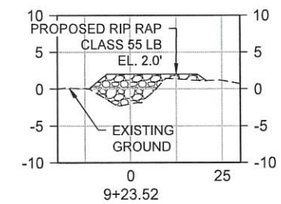

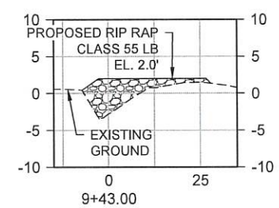

NOTES:

1. THE BID QUANTITY OF FILL IS BASED ON SURVEY DATA COLLECTED BY T.BAKER SMITH DURING JUNE AND JULY OF 2022. SEE SHEET 3 FOR QUANTITIES.
2. A TOP WIDTH OF 10' IS REQUIRED FOR TYPICAL RIP RAP SECTIONS UNLESS NOTED OTHERWISE.
3. WOVEN GEOTEXTILE FABRIC TO EXTEND 3' BEYOND PROPOSED FOOTPRINT OF THE RIP RAP BEFORE RIP RAP INSTALLED. NO PAY INCLUDED FOR OVERLAP OF GEOTEXTILE.
4. ELEVATION OF TIE-IN AT TOE OF ROCK WILL BE DICTATED BY SIDE-SLOPE OF ROCK UNLESS NOTED OTHERWISE.
5. EXISTING STRUCTURE ELEVATION AT 2.0'
6. SIDE-SLOPE OF RIP RAP IS 3:1 H:V UNLESS NOTED OTHERWISE.
7. MEAN HIGH WATER 1.3', MEAN LOW WATER 0.3'.
8. WHERE THE PROPOSED GEOTEXTILE AND RIP RAP INSTALL IS TO BE IN CONTACT WITH THE EXISTING GRADE, THE AREA SHALL BE CLEANED AND RID OF ANY EXISTING DEBRIS, PRIOR TO INSTALLATION OF THE GEOTEXTILE AND RIP RAP.

HORIZONTAL GRAPHIC SCALE

40' 20' 0' 40' 80'

20' 10' 0' 20' 40'

VERTICAL GRAPHIC SCALE

STATE OF LOUISIANA
BEAU J. TATE
License No. 30990
PROFESSIONAL ENGINEER
4/3/23

REV.	DATE	DESCRIPTION	BY
2	01/27/23	Final Design Drawings and Construction Plans	BB
1	11/07/22	Preliminary Design Drawings	BB

ROYAL engineering consultants
1231 Camellia Boulevard
Lafayette, Louisiana 70508

COASTAL PROTECTION AND RESTORATION AUTHORITY
150 TERRACE AVENUE
BATON ROUGE, LOUISIANA 70802

MANGROVE BAYOU PLUG
CROSS SECTIONS

DESIGNED BY: BB
APPROVED BY: BT

CAMERON CREOLE MAINTENANCE PROJECT
STORM DAMAGE REPAIRS

STATE PROJECT NUMBER: CS-004-A
DRAWN BY: REC

DATE: NOV 07, 2022

SHEET 11 OF 45

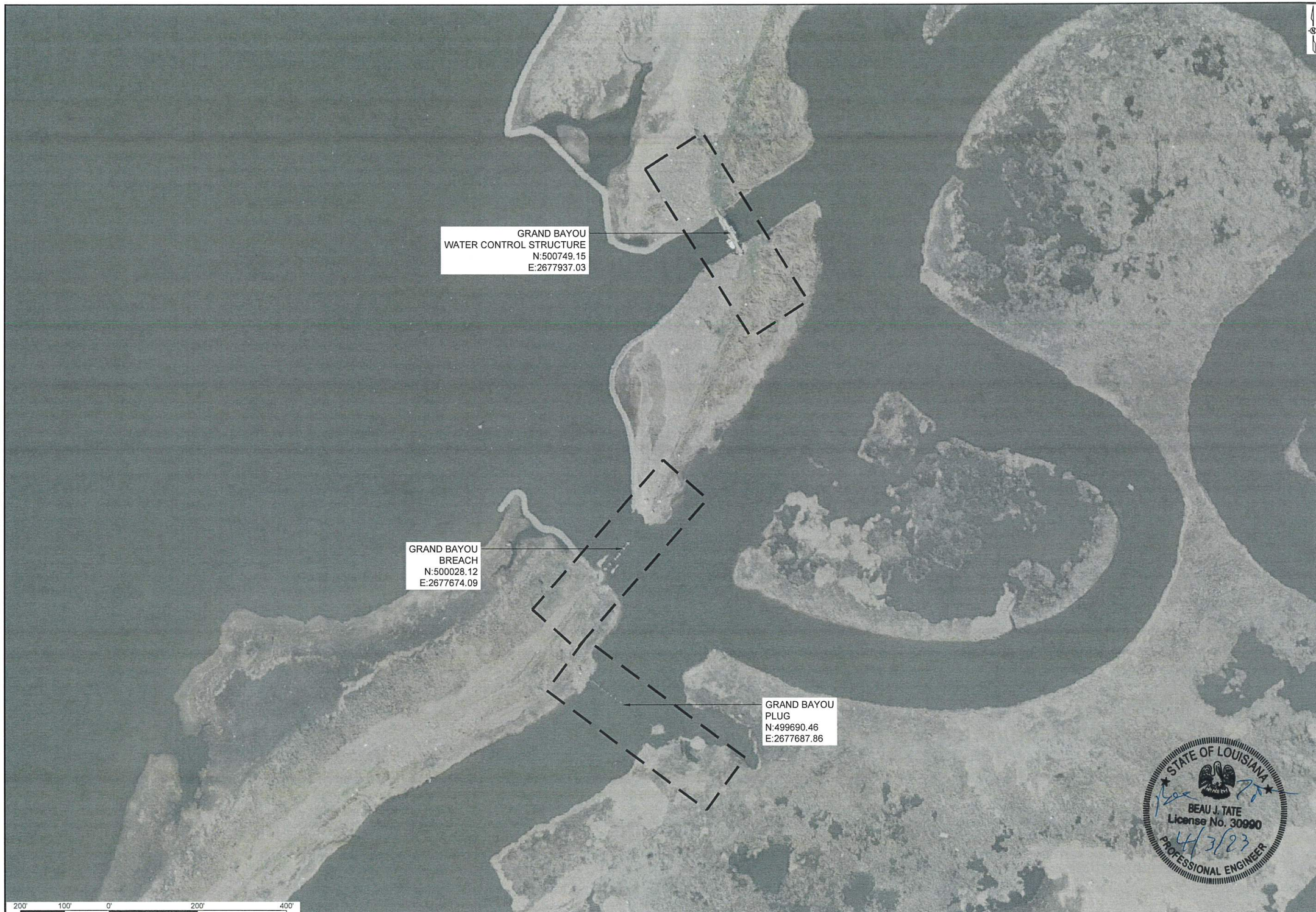

STATE OF LOUISIANA
BEAU J. TATE
License No. 30990
PROFESSIONAL ENGINEER
4/3/23

REV.	DATE	DESCRIPTION	BY
2	01/27/23	Final Design Drawings and Construction Plans	BB
1	11/07/22	Preliminary Design Drawings	BB

ROYAL engineeringconsultants

1231 Camellia Boulevard
Lafayette, Louisiana 70508

COASTAL PROTECTION AND RESTORATION AUTHORITY
150 TERRACE AVENUE
BATON ROUGE, LOUISIANA 70802

GRAND BAYOU PROJECT AREA MAP

DESIGNED BY: BB
APPROVED BY: BT

CAMERON CREOLE MAINTENANCE PROJECT
STORM DAMAGE REPAIRS

STATE PROJECT NUMBER: CS-004-A
DRAWN BY: REC

DATE: NOV. 07, 2022

SHEET 12 OF 45

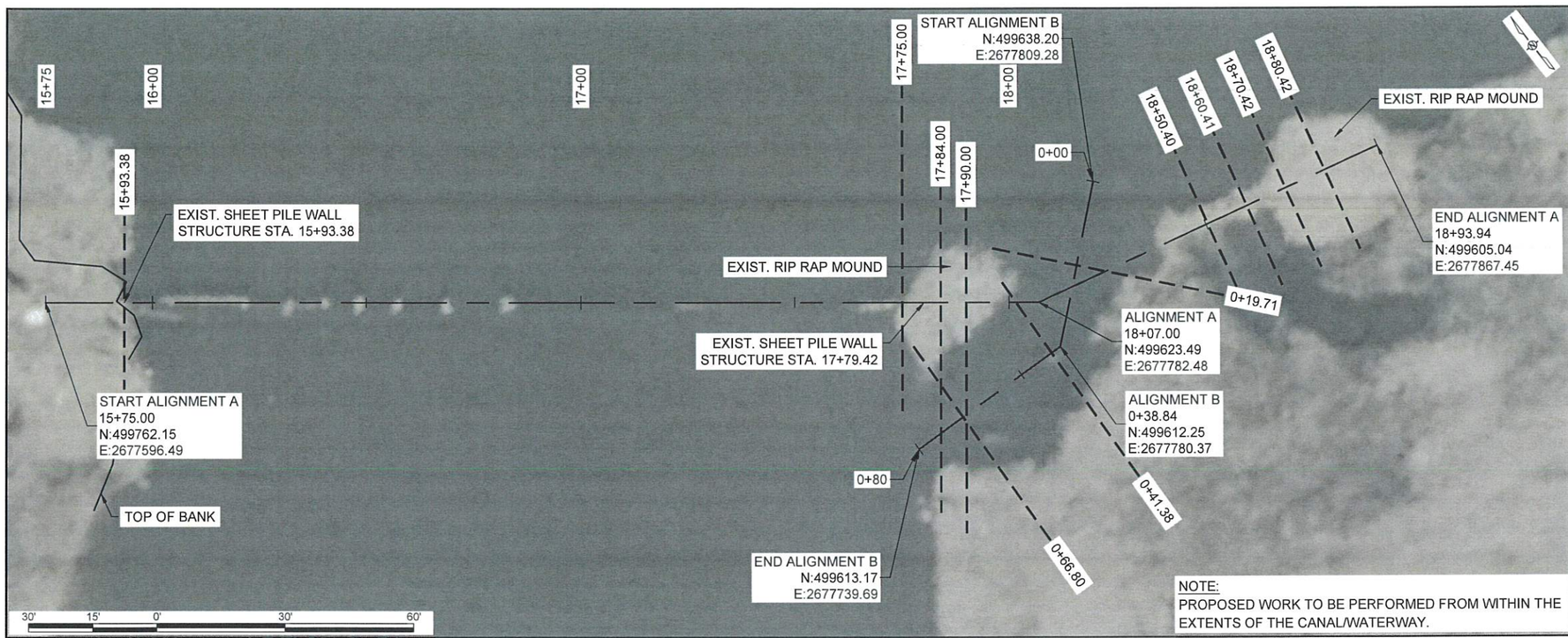

NOTE:
PROPOSED WORK TO BE PERFORMED FROM WITHIN THE EXTENTS OF THE CANAL/WATERWAY.

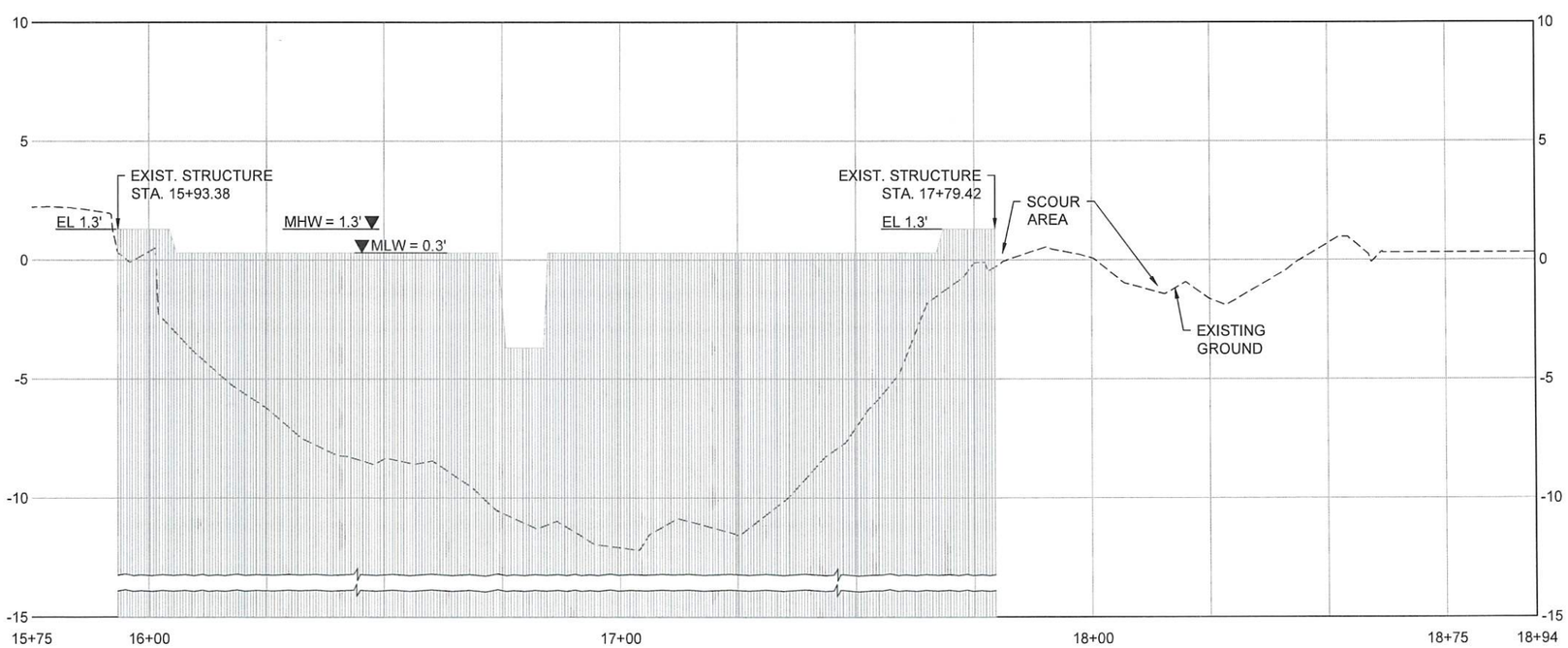

ALIGNMENT A

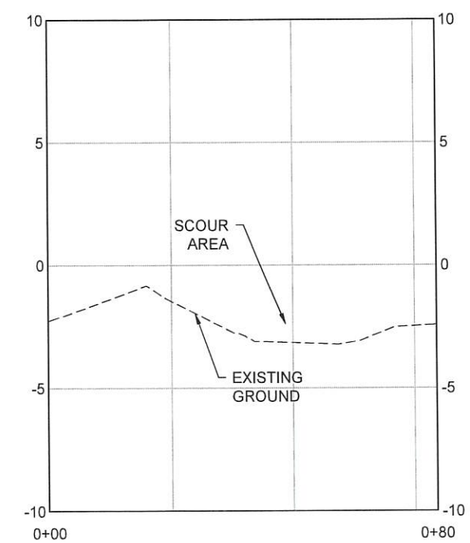

ALIGNMENT B

HORIZONTAL GRAPHIC SCALE
30' 15' 0' 30' 60'
6' 3' 0' 6' 12'
VERTICAL GRAPHIC SCALE

STATE OF LOUISIANA
BEAU J. TATE
License No. 30990
4/3/23
PROFESSIONAL ENGINEER

REV.	DATE	DESCRIPTION	BY
2	01/27/23	Final Design Drawings and Construction Plans	BB
1	11/07/22	Preliminary Design Drawings	BB

ROYAL engineering consultants
1231 Camellia Boulevard
Lafayette, Louisiana 70508

COASTAL PROTECTION AND RESTORATION AUTHORITY
150 TERRACE AVENUE
BATON ROUGE, LOUISIANA 70802

EXISTING GRAND BAYOU PLUG PLAN/PROFILE

DESIGNED BY: BB
APPROVED BY: BT

CAMERON CREOLE MAINTENANCE PROJECT STORM DAMAGE REPAIRS

STATE PROJECT NUMBER: CS-004-A
DRAWN BY: REC

DATE: NOV. 07, 2022

SHEET 13 OF 45

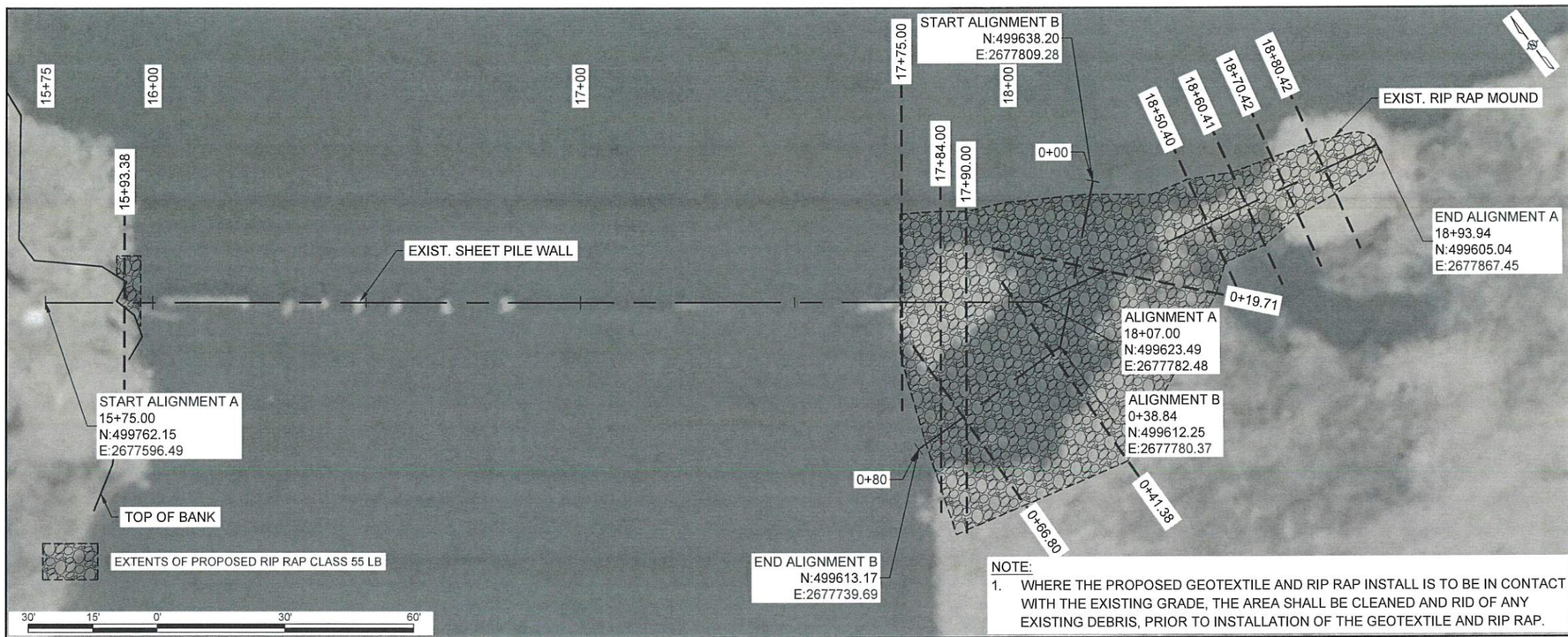

NOTE:
1. WHERE THE PROPOSED GEOTEXTILE AND RIP RAP INSTALL IS TO BE IN CONTACT WITH THE EXISTING GRADE, THE AREA SHALL BE CLEANED AND RID OF ANY EXISTING DEBRIS, PRIOR TO INSTALLATION OF THE GEOTEXTILE AND RIP RAP.

STATE OF LOUISIANA
BEAU J. TATE
License No. 30990
PROFESSIONAL ENGINEER
4/3/23

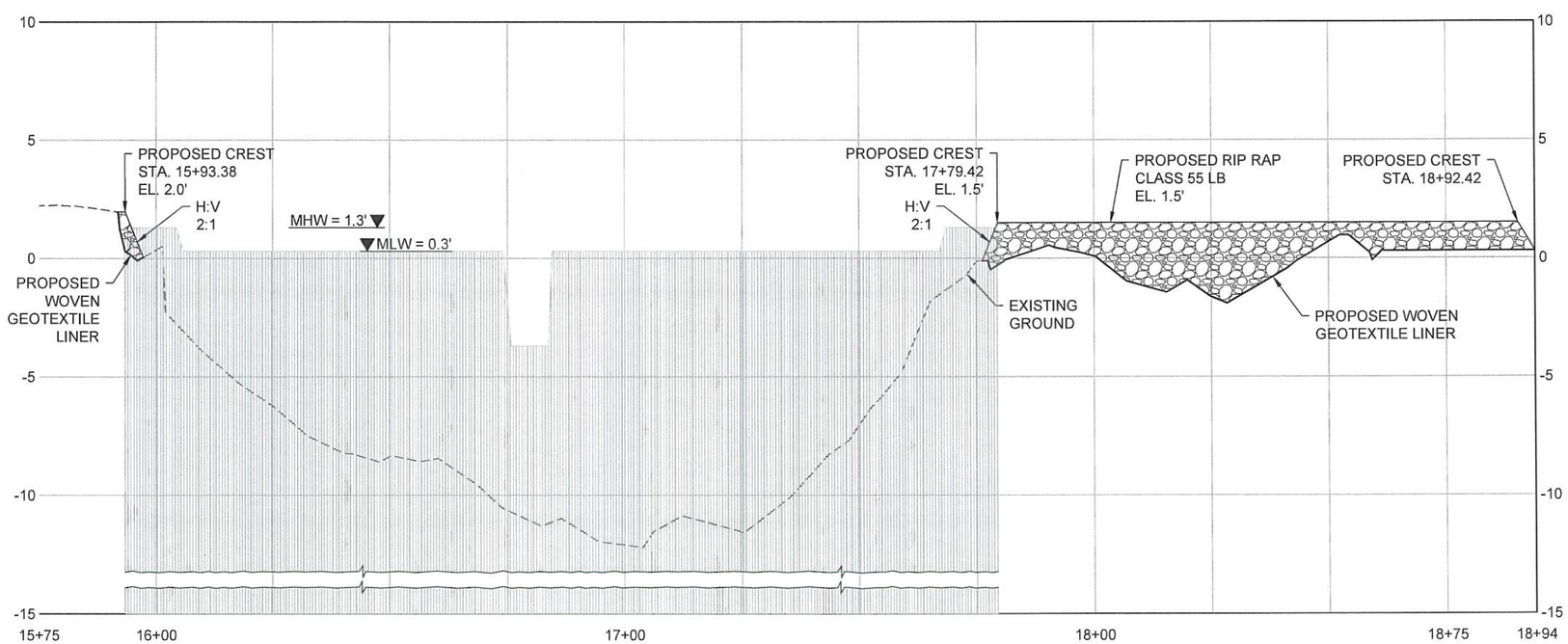

ALIGNMENT A

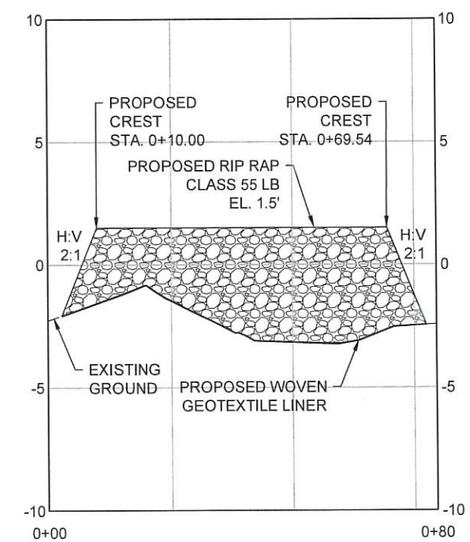

ALIGNMENT B

HORIZONTAL GRAPHIC SCALE
30' 15' 0' 30' 60'
6' 3' 0' 6' 12'
VERTICAL GRAPHIC SCALE

REV.	DATE	DESCRIPTION	BY
2	01/27/23	Final Design Drawings and Construction Plans	BB
1	11/07/22	Preliminary Design Drawings	BB

ROYAL engineering consultants
1231 Camellia Boulevard
Lafayette, Louisiana 70508

COASTAL PROTECTION AND RESTORATION AUTHORITY
150 TERRACE AVENUE
BATON ROUGE, LOUISIANA 70802

PROPOSED GRAND BAYOU PLUG PLAN/PROFILE

DESIGNED BY: BB
APPROVED BY: BT

CAMERON CREOLE MAINTENANCE PROJECT
STORM DAMAGE REPAIRS

STATE PROJECT NUMBER: CS-004-A
DRAWN BY: REC

DATE: NOV. 07, 2022

SHEET 14 OF 45

ALIGNMENT A

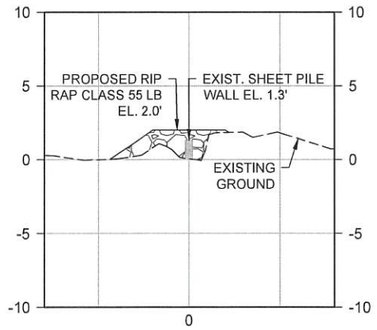

15+93.38

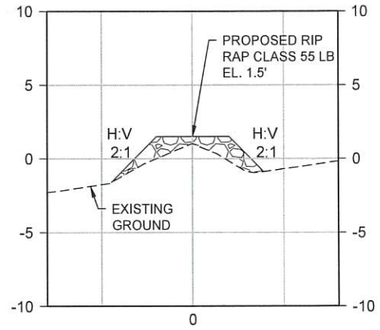

18+50.40

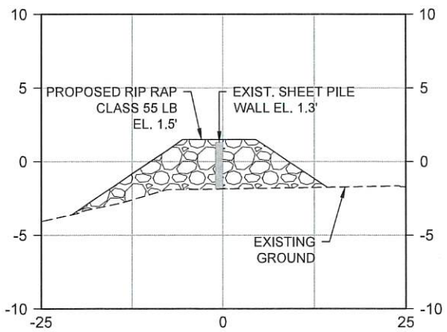

17+75.00

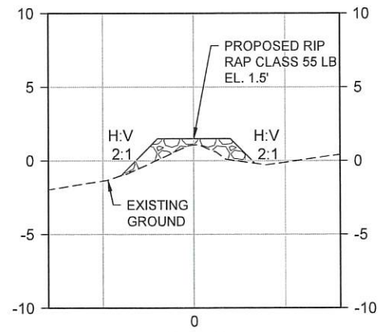

18+60.41

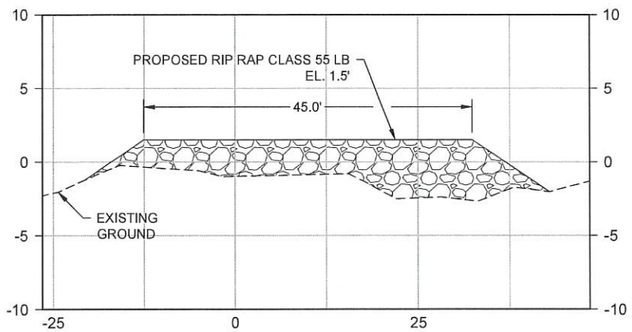

17+84.00

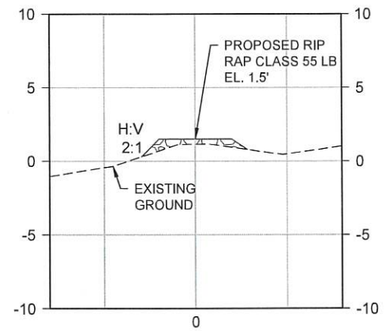

18+70.42

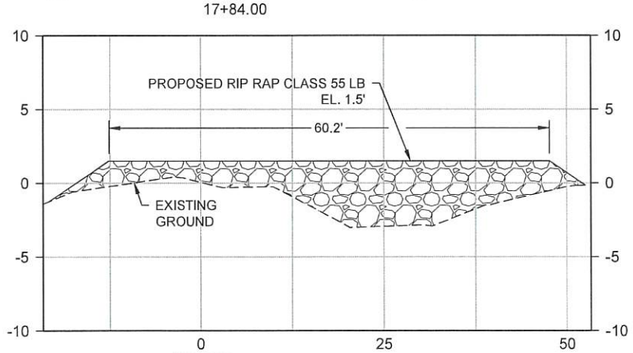

17+90.00

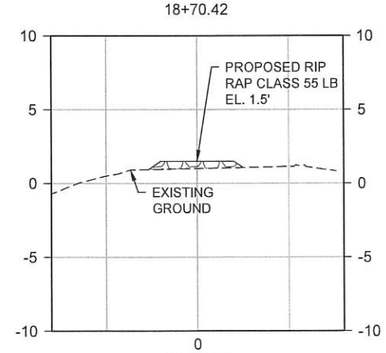

18+80.42

ALIGNMENT B

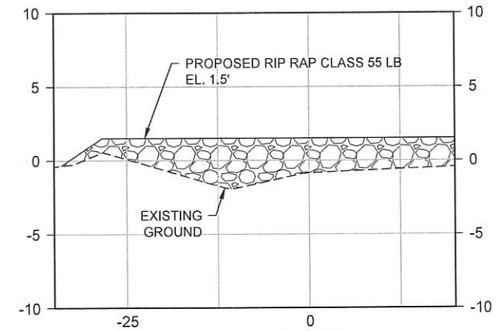

0+19.71

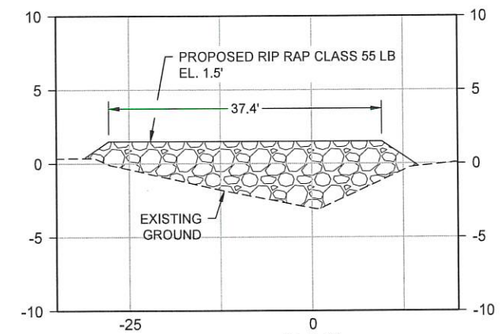

0+41.38

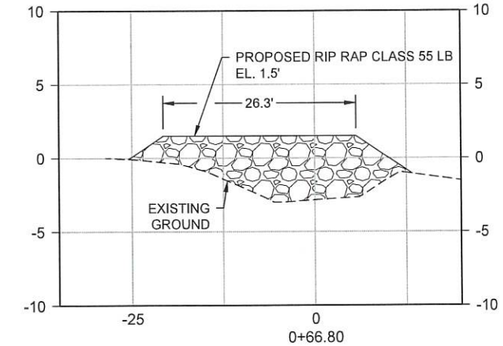

0+66.80

NOTES:

1. THE BID QUANTITY OF FILL IS BASED ON SURVEY DATA COLLECTED BY T.BAKER SMITH DURING JUNE AND JULY OF 2022. SEE SHEET 3 FOR QUANTITIES.
2. A TOP WIDTH OF 10' IS REQUIRED FOR TYPICAL RIP RAP SECTIONS UNLESS NOTED OTHERWISE.
3. WOVEN GEOTEXTILE FABRIC TO EXTEND 3' BEYOND PROPOSED FOOTPRINT OF THE RIP RAP BEFORE RIP RAP INSTALLED. NO PAY INCLUDED FOR OVERLAP OF GEOTEXTILE.
4. ELEVATION OF TIE-IN AT TOE OF ROCK WILL BE DICTATED BY SIDE-SLOPE OF ROCK UNLESS NOTED OTHERWISE.
5. EXISTING STRUCTURE ELEVATION AT 1.3'
6. SIDE-SLOPE OF RIP RAP IS 3:1 H:V UNLESS NOTED OTHERWISE.
7. MEAN HIGH WATER 1.3', MEAN LOW WATER 0.3'.
8. WHERE THE PROPOSED GEOTEXTILE AND RIP RAP INSTALL IS TO BE IN CONTACT WITH THE EXISTING GRADE, THE AREA SHALL BE CLEANED AND RID OF ANY EXISTING DEBRIS, PRIOR TO INSTALLATION OF THE GEOTEXTILE AND RIP RAP.

HORIZONTAL GRAPHIC SCALE

20' 10' 0' 20' 40'

10' 5' 0' 10' 20'

VERTICAL GRAPHIC SCALE

STATE OF LOUISIANA
BEAU J. TATE
License No. 30990
4/3/23
PROFESSIONAL ENGINEER

REV.	DATE	DESCRIPTION	BY
2	01/27/23	Final Design Drawings and Construction Plans	BB
1	11/07/22	Preliminary Design Drawings	BB

ROYAL engineering consultants
1231 Camellia Boulevard
Lafayette, Louisiana 70508

COASTAL PROTECTION AND RESTORATION AUTHORITY
150 TERRACE AVENUE
BATON ROUGE, LOUISIANA 70802

GRAND BAYOU PLUG
CROSS SECTIONS

DESIGNED BY: BB
APPROVED BY: BT

CAMERON CREOLE MAINTENANCE PROJECT
STORM DAMAGE REPAIRS

STATE PROJECT NUMBER: CS-004-A
DRAWN BY: REC

DATE: NOV. 07, 2022

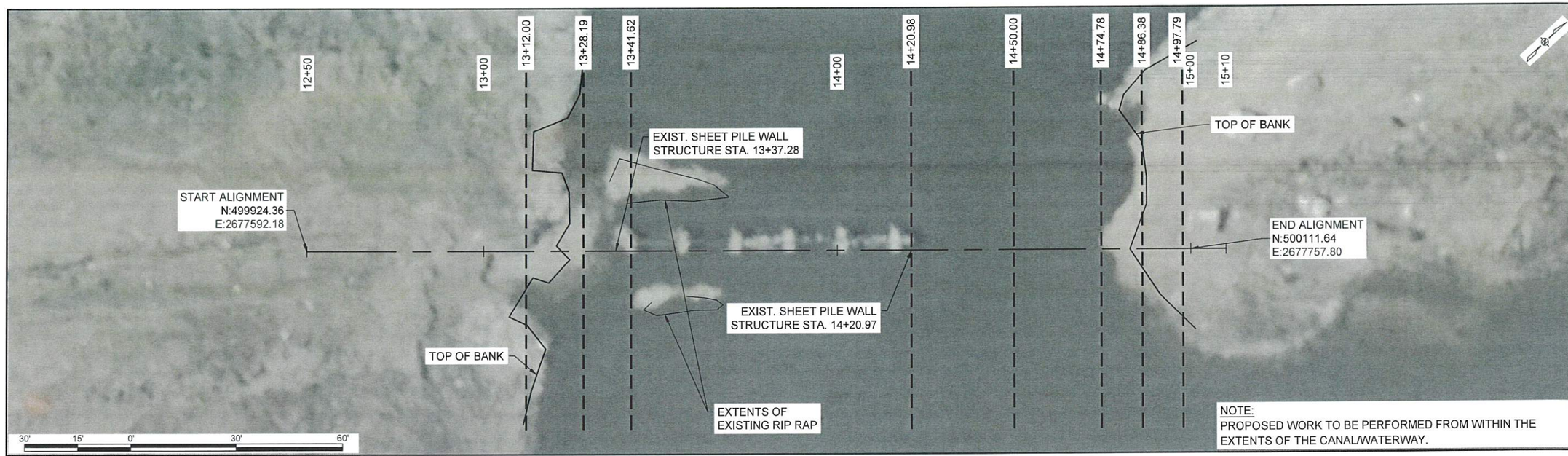

NOTE:
PROPOSED WORK TO BE PERFORMED FROM WITHIN THE EXTENTS OF THE CANAL/WATERWAY.

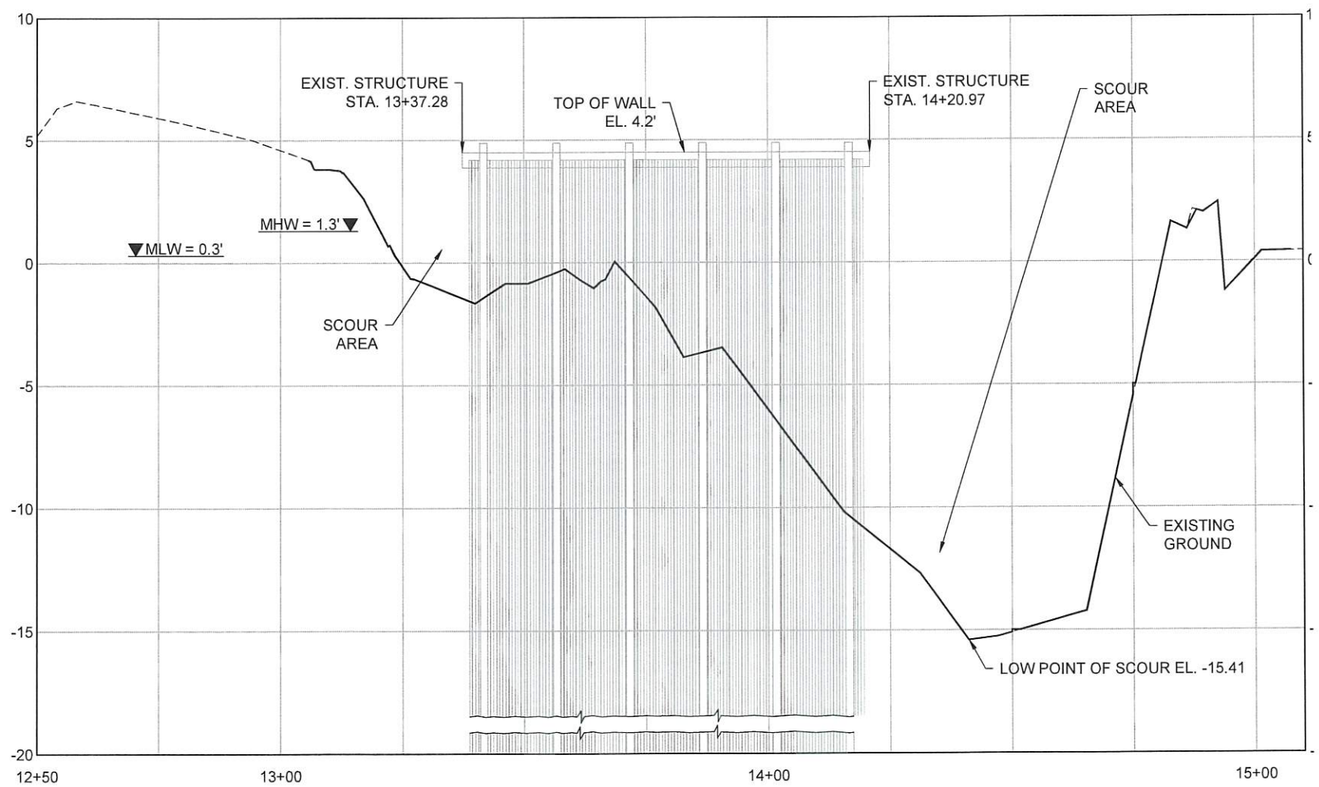

HORIZONTAL GRAPHIC SCALE
30' 15' 0' 30' 60'
6' 3' 0' 6' 12'
VERTICAL GRAPHIC SCALE

STATE OF LOUISIANA
BEAU J. TATE
License No. 30990
PROFESSIONAL ENGINEER
4/3/23

REV.	DATE	DESCRIPTION	BY
2	01/27/23	Final Design Drawings and Construction Plans	BB
1	11/07/22	Preliminary Design Drawings	BB

ROYAL engineering consultants
1231 Camellia Boulevard
Lafayette, Louisiana 70508

COASTAL PROTECTION AND RESTORATION AUTHORITY
150 TERRACE AVENUE
BATON ROUGE, LOUISIANA 70802

EXISTING GRAND BAYOU BREACH PLAN/PROFILE

DESIGNED BY: BB
APPROVED BY: BT

CAMERON CREOLE MAINTENANCE PROJECT STORM DAMAGE REPAIRS

STATE PROJECT NUMBER: CS-004-A
DRAWN BY: REC

DATE: NOV. 07, 2022

SHEET 16 OF 45

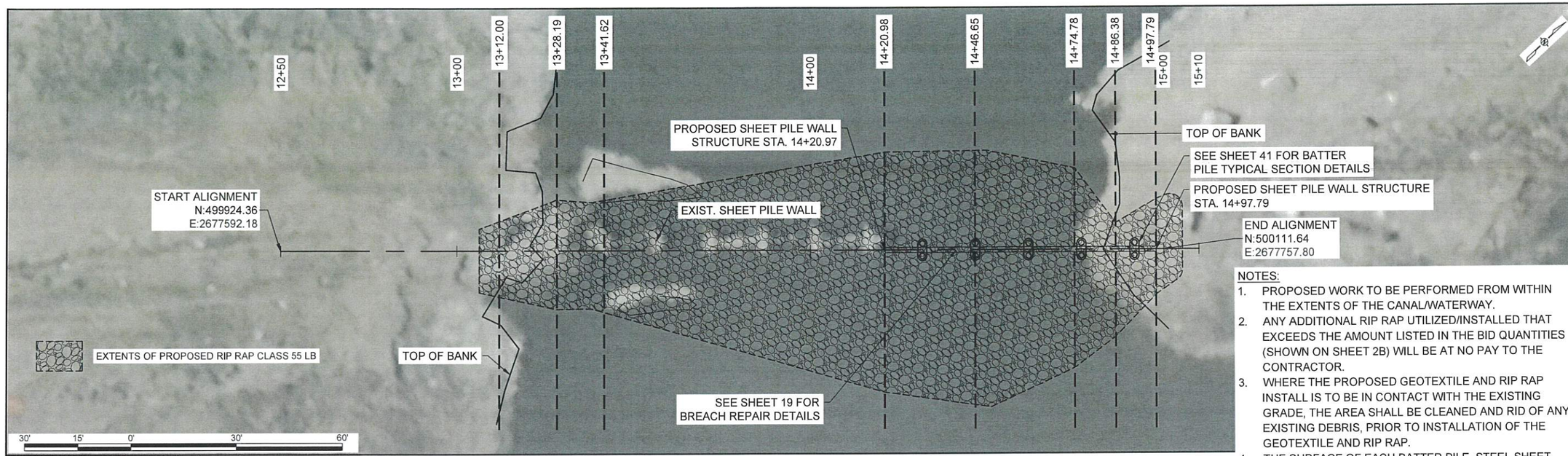

NOTES:

1. PROPOSED WORK TO BE PERFORMED FROM WITHIN THE EXTENTS OF THE CANAL/WATERWAY.
2. ANY ADDITIONAL RIP RAP UTILIZED/INSTALLED THAT EXCEEDS THE AMOUNT LISTED IN THE BID QUANTITIES (SHOWN ON SHEET 2B) WILL BE AT NO PAY TO THE CONTRACTOR.
3. WHERE THE PROPOSED GEOTEXTILE AND RIP RAP INSTALL IS TO BE IN CONTACT WITH THE EXISTING GRADE, THE AREA SHALL BE CLEANED AND RID OF ANY EXISTING DEBRIS, PRIOR TO INSTALLATION OF THE GEOTEXTILE AND RIP RAP.
4. THE SURFACE OF EACH BATTER PILE, STEEL SHEET PILE, STEEL W-BEAM, H-PILE, AND ALL ASSOCIATED CAPS AND CONNECTIONS SHALL BE CLEANED, PRIMED, AND COATED FROM THE TOP OF THE BATTER PILE/SHEET PILE TO A POINT 10 FEET BELOW THE MUD LINE. COATING SHALL BE APPLIED USING 2 COATS OF COAL TAR EPOXY-POLYAMIDE.

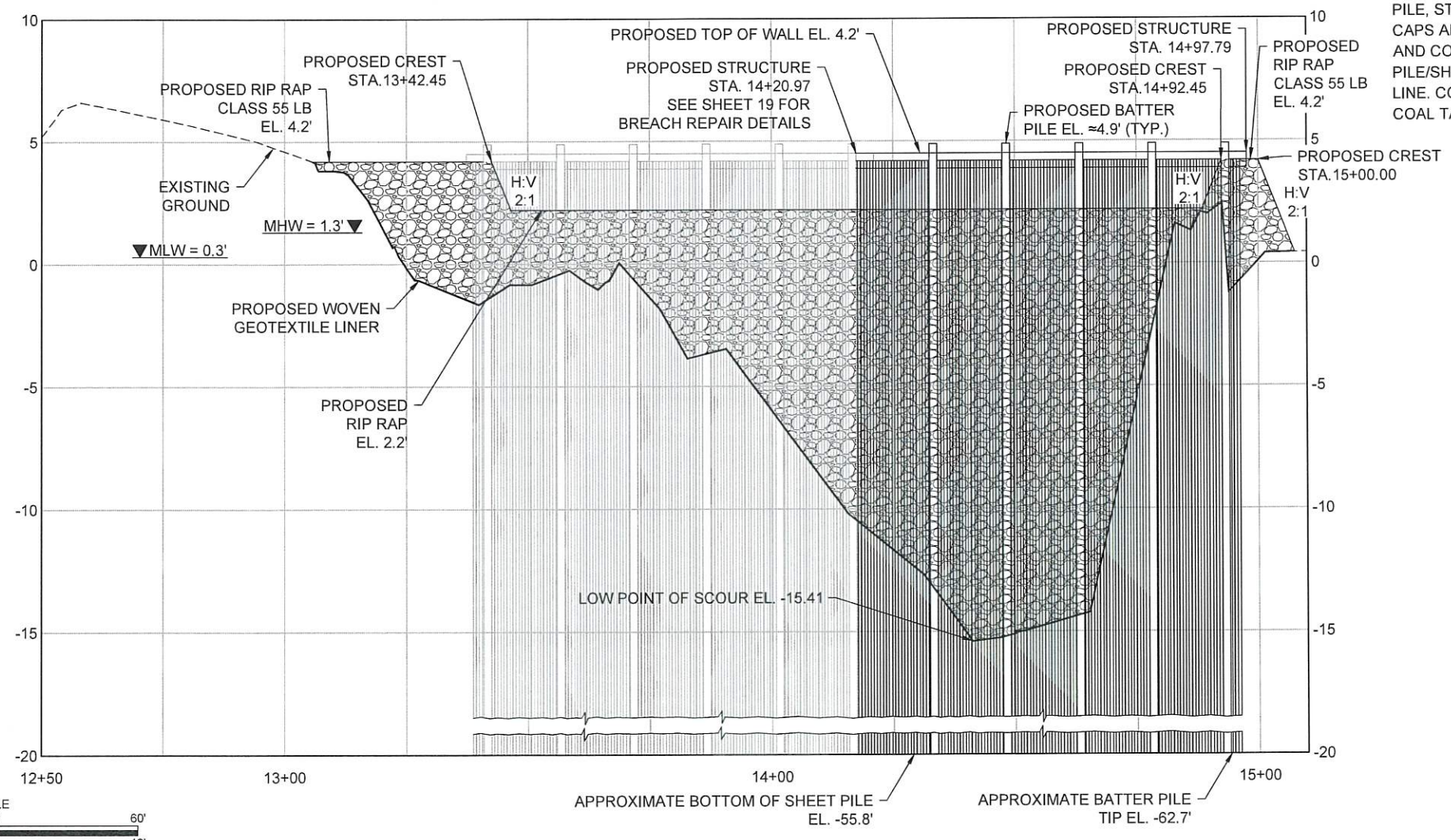

HORIZONTAL GRAPHIC SCALE
30' 15' 0' 30' 60'
6' 3' 0' 6' 12'
VERTICAL GRAPHIC SCALE

STATE OF LOUISIANA
BEAU J. TATE
License No. 30990
PROFESSIONAL ENGINEER
4/3/23

REV.	DATE	DESCRIPTION	BY
2	01/27/23	Final Design Drawings and Construction Plans	BB
1	11/07/22	Preliminary Design Drawings	BB

ROYAL engineering consultants
1231 Camellia Boulevard
Lafayette, Louisiana 70508

COASTAL PROTECTION AND RESTORATION AUTHORITY
150 TERRACE AVENUE
BATON ROUGE, LOUISIANA 70802

PROPOSED GRAND BAYOU BREACH PLAN/PROFILE

DESIGNED BY: BB
APPROVED BY: BT

CAMERON CREOLE MAINTENANCE PROJECT STORM DAMAGE REPAIRS

STATE PROJECT NUMBER: CS-004-A
DRAWN BY: REC

DATE: NOV. 07, 2022

SHEET 17 OF 45

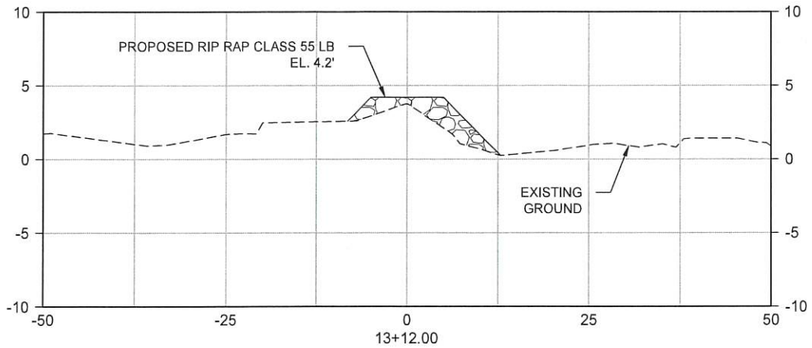

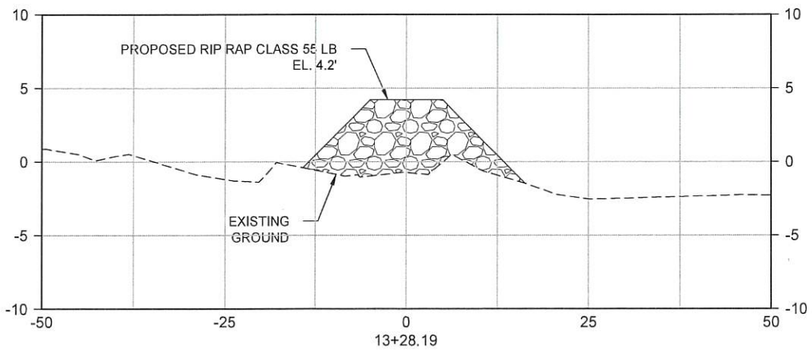

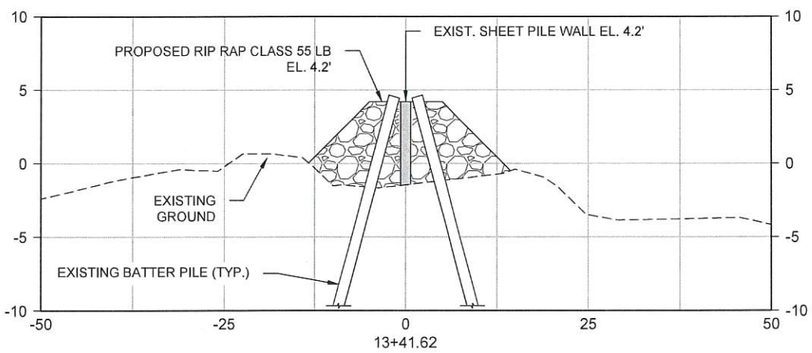

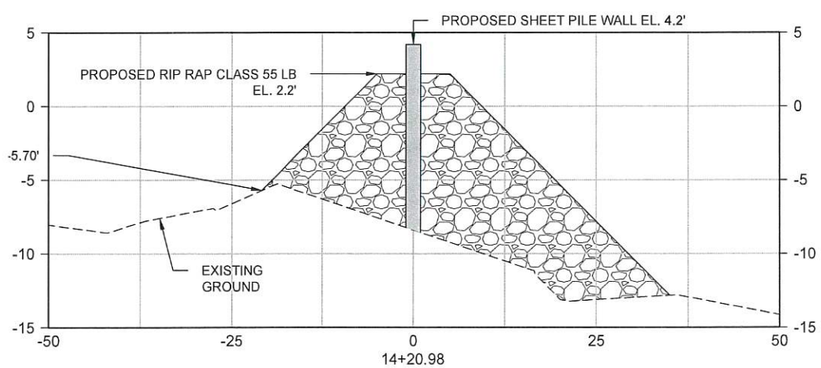

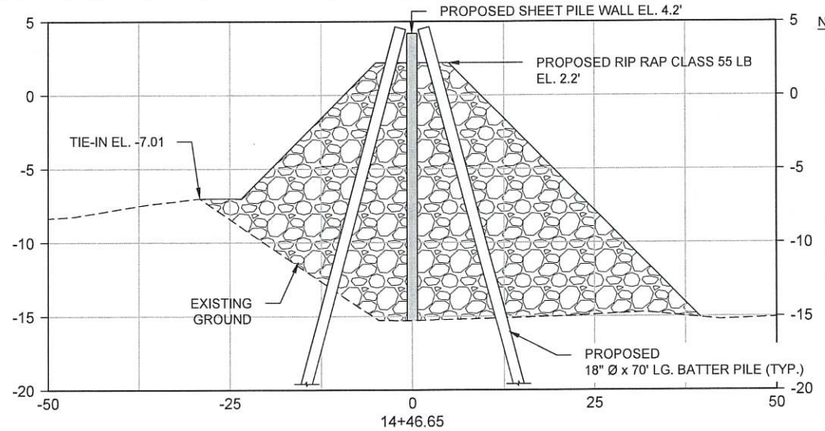

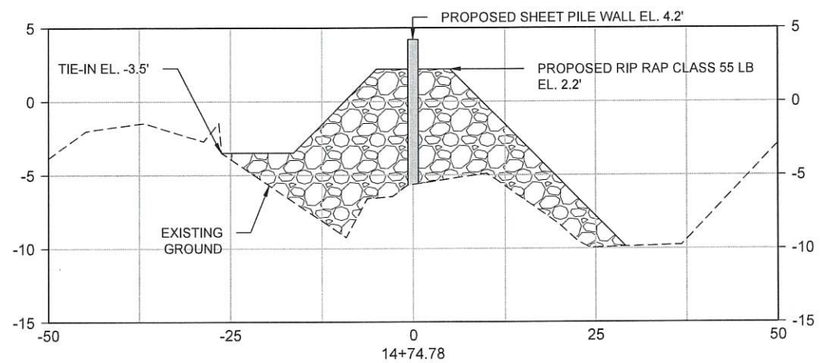

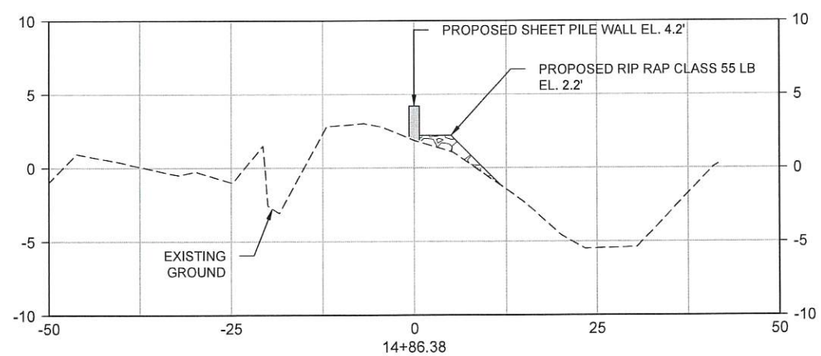

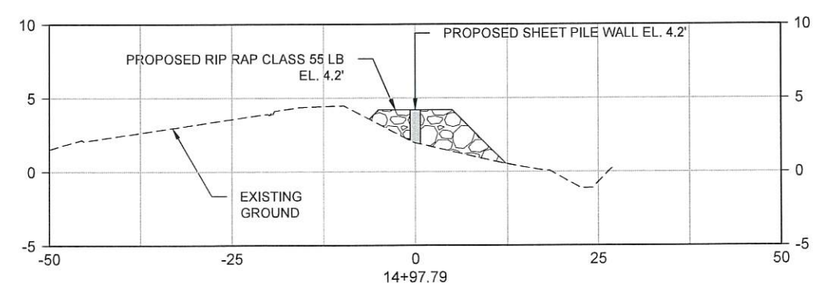

NOTES:

1. THE BID QUANTITY OF FILL IS BASED ON SURVEY DATA COLLECTED BY T.BAKER SMITH DURING JUNE AND JULY OF 2022. SEE SHEET 3 FOR QUANTITIES.
2. A TOP WIDTH OF 10' IS REQUIRED FOR TYPICAL RIP RAP SECTIONS UNLESS NOTED OTHERWISE.
3. WOVEN GEOTEXTILE FABRIC TO EXTEND 3' BEYOND PROPOSED FOOTPRINT OF THE RIP RAP BEFORE RIP RAP INSTALLED. NO PAY INCLUDED FOR OVERLAP OF GEOTEXTILE.
4. ELEVATION OF TIE-IN AT TOE OF ROCK WILL BE DICTATED BY SIDE-SLOPE OF ROCK UNLESS NOTED OTHERWISE.
5. EXISTING STRUCTURE ELEVATION AT 4.2'
6. SIDE-SLOPE OF RIP RAP IS 3:1 H:V UNLESS NOTED OTHERWISE.
7. MEAN HIGH WATER 1.3', MEAN LOW WATER 0.3'.
8. ALL EXISTING AND PROPOSED BATTER PILE WALL ANCHORS TO BE COMPLETELY ENCASED BY RIP RAP.
9. ANY ADDITIONAL RIP RAP UTLIZED/INSTALLED THAT EXCEEDS THE AMOUNT LISTED IN THE BID QUANTITIES (SHOWN ON SHEET 2B) WILL BE AT NO PAY TO THE CONTRACTOR.
10. CONTRACTOR SHALL PLACE RIP RAP FROM THE EXISTING AND PROPOSED SHEET PILE WALLS GOING OUTWARD TO ENSURE THAT RIP RAP IS INSTALLED COMPLETELY AROUND ALL EXISTING AND PROPOSED SETS OF BATTER PILES.
11. SECTIONS SHOWING EXISTING AND PROPOSED BATTER PILE LOCATIONS ARE APPROXIMATE ONLY. THE BATTER PILE SPACING SHOWN ON SHEET 19 SHALL TAKE PRECEDENCE IN DICTATING THE ACTUAL SPACING OF PROPOSED BATTER PILES.
12. WHERE THE PROPOSED GEOTEXTILE AND RIP RAP INSTALL IS TO BE IN CONTACT WITH THE EXISTING GRADE, THE AREA SHALL BE CLEANED AND RID OF ANY EXISTING DEBRIS, PRIOR TO INSTALLATION OF THE GEOTEXTILE AND RIP RAP.

STATE OF LOUISIANA
BEAU J. TATE
License No. 30990
PROFESSIONAL ENGINEER
4/3/23

HORIZONTAL GRAPHIC SCALE
20' 10' 0' 20' 40'
10' 5' 0' 10' 20'
VERTICAL GRAPHIC SCALE

REV.	DATE	DESCRIPTION	BY
2	01/27/23	Final Design Drawings and Construction Plans	BB
1	11/07/22	Preliminary Design Drawings	BB

ROYAL engineering consultants
1231 Camellia Boulevard
Lafayette, Louisiana 70508

COASTAL PROTECTION AND RESTORATION AUTHORITY
150 TERRACE AVENUE
BATON ROUGE, LOUISIANA 70802

GRAND BAYOU BREACH CROSS SECTIONS

DESIGNED BY: BB
APPROVED BY: BT
DRAWN BY: REC

CAMERON CREOLE MAINTENANCE PROJECT STORM DAMAGE REPAIRS

STATE PROJECT NUMBER: CS-004-A

DATE: NOV. 07, 2022

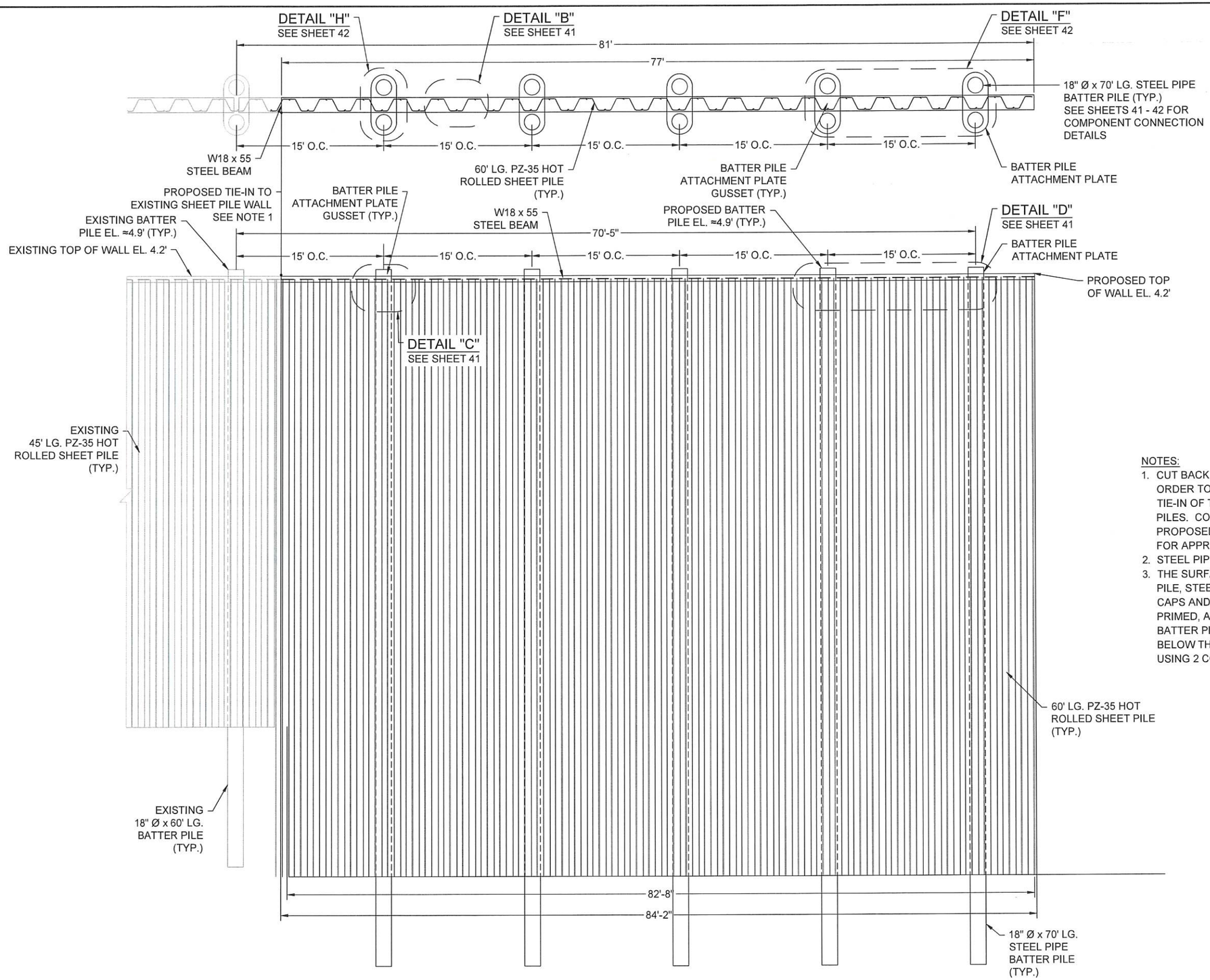

BREACH REPAIR SECTION

SCALE: 1" = 10'

NOTES:

1. CUT BACK EXISTING TOP WHALER AS NEEDED IN ORDER TO OBTAIN A CLEAN KNUCKLE-TO-KNUCKLE TIE-IN OF THE PROPOSED AND EXISTING SHEET PILES. CONTRACTOR SHALL SUBMIT THE PROPOSED SHEET PILE TIE-IN PLAN TO ENGINEER FOR APPROVAL PRIOR TO PERFORMING THE TIE-IN.
2. STEEL PIPE PILES TO BE BATTERED AT A 15° ANGLE.
3. THE SURFACE OF EACH BATTER PILE, STEEL SHEET PILE, STEEL W-BEAM, H-PILE, AND ALL ASSOCIATED CAPS AND CONNECTIONS SHALL BE CLEANED, PRIMED, AND COATED FROM THE TOP OF THE BATTER PILE/SHEET PILE TO A POINT 10 FEET BELOW THE MUD LINE. COATING SHALL BE APPLIED USING 2 COATS OF COAL TAR EPOXY-POLYAMIDE.

STATE OF LOUISIANA
BEAU J. TATE
License No. 30990
4/3/23
PROFESSIONAL ENGINEER

REV.	DATE	DESCRIPTION	BY
2	01/27/23	Final Design Drawings and Construction Plans	BB
1	11/07/22	Preliminary Design Drawings	BB

ROYAL engineering consultants
1231 Camellia Boulevard
Lafayette, Louisiana 70508

COASTAL PROTECTION AND RESTORATION AUTHORITY
150 TERRACE AVENUE
BATON ROUGE, LOUISIANA 70802

GRAND BAYOU BREACH REPAIR PLAN AND SECTION

DESIGNED BY: BB
APPROVED BY: BT

CAMERON CREOLE MAINTENANCE PROJECT STORM DAMAGE REPAIRS

STATE PROJECT NUMBER: CS-004-A
DRAWN BY: REC

DATE: NOV. 07, 2022

SHEET 19 OF 45

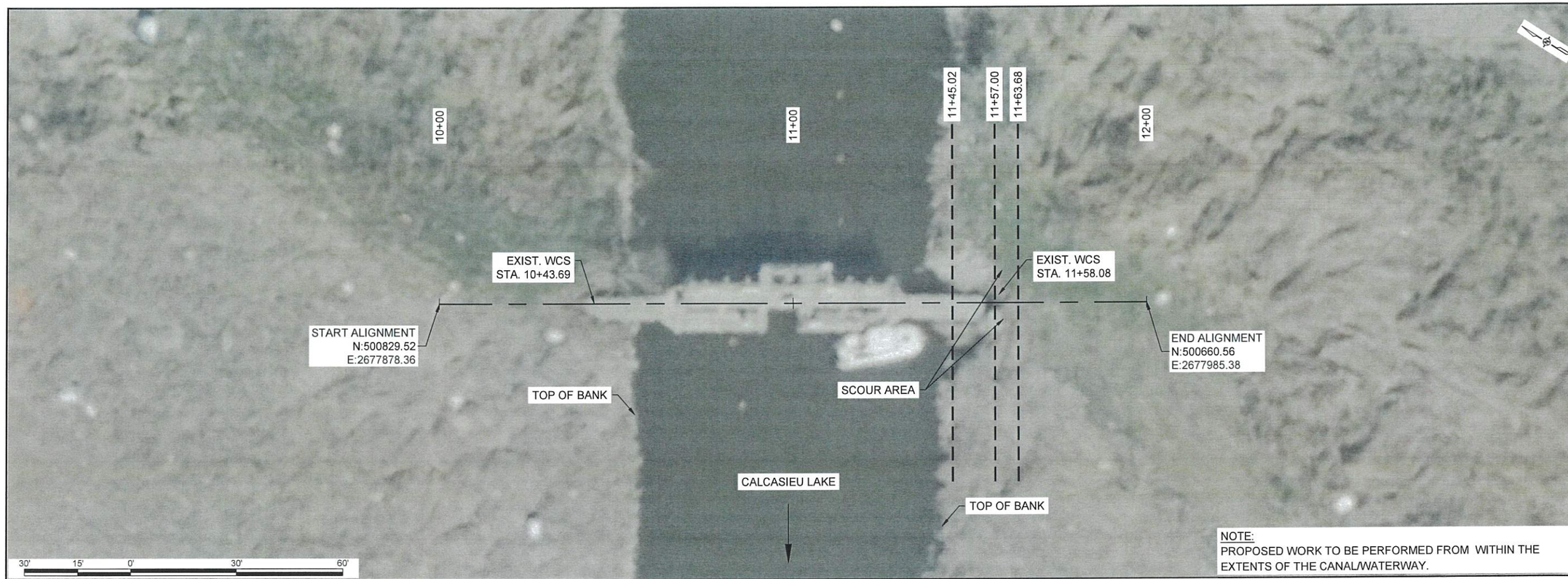

NOTE:
PROPOSED WORK TO BE PERFORMED FROM WITHIN THE EXTENTS OF THE CANAL/WATERWAY.

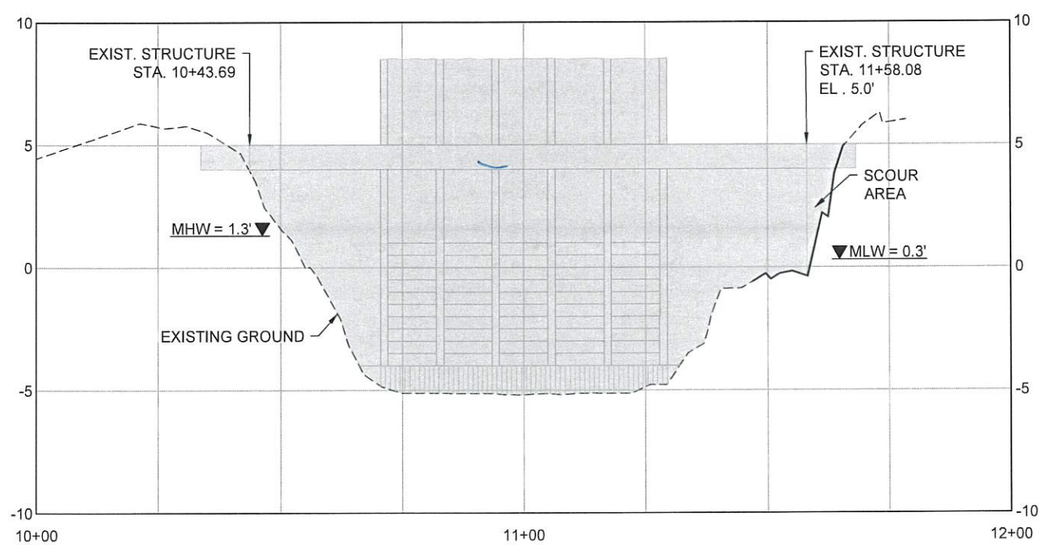

HORIZONTAL GRAPHIC SCALE
30' 15' 0' 30' 60'
6' 3' 0' 6' 12'
VERTICAL GRAPHIC SCALE

STATE OF LOUISIANA
BEAU J. TATE
License No. 30990
4/3/23
PROFESSIONAL ENGINEER

REV.	DATE	DESCRIPTION	BY
2	01/27/23	Final Design Drawings and Construction Plans	BB
1	11/07/22	Preliminary Design Drawings	BB

ROYAL engineering consultants
1231 Camellia Boulevard
Lafayette, Louisiana 70508

COASTAL PROTECTION AND RESTORATION AUTHORITY
150 TERRACE AVENUE
BATON ROUGE, LOUISIANA 70802

GRAND BAYOU WCS PLAN/PROFILE

DESIGNED BY: BB
APPROVED BY: BT

CAMERON CREOLE MAINTENANCE PROJECT
STORM DAMAGE REPAIRS

STATE PROJECT NUMBER: CS-004-A
DRAWN BY: REC

DATE: NOV. 07, 2022

SHEET 20 OF 45

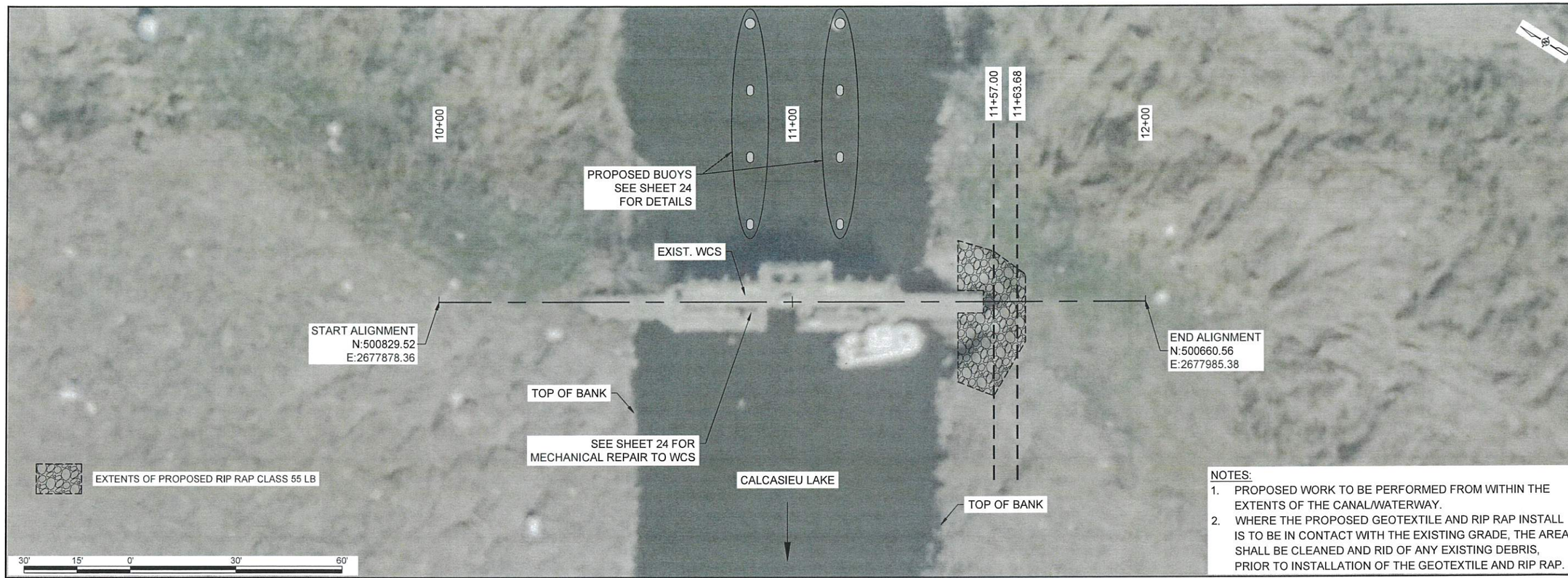

NOTES:

1. PROPOSED WORK TO BE PERFORMED FROM WITHIN THE EXTENTS OF THE CANAL/WATERWAY.
2. WHERE THE PROPOSED GEOTEXTILE AND RIP RAP INSTALL IS TO BE IN CONTACT WITH THE EXISTING GRADE, THE AREA SHALL BE CLEANED AND RID OF ANY EXISTING DEBRIS, PRIOR TO INSTALLATION OF THE GEOTEXTILE AND RIP RAP.

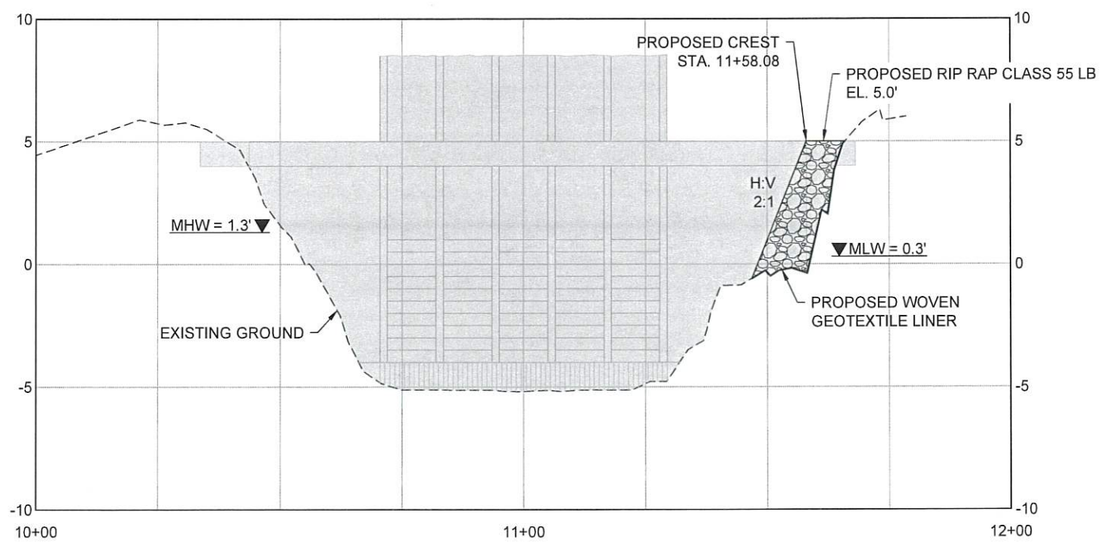

HORIZONTAL GRAPHIC SCALE
30' 15' 0' 30' 60'
6' 3' 0' 6' 12'
VERTICAL GRAPHIC SCALE

STATE OF LOUISIANA
BEAU J. TATE
License No. 30990
4/3/23
PROFESSIONAL ENGINEER

REV.	DATE	DESCRIPTION	BY
2	01/27/23	Final Design Drawings and Construction Plans	BB
1	11/07/22	Preliminary Design Drawings	BB

ROYAL engineering&consultant
1231 Camellia Boulevard
Lafayette, Louisiana 70508

COASTAL PROTECTION AND RESTORATION AUTHORITY
150 TERRACE AVENUE
BATON ROUGE, LOUISIANA 70802

GRAND BAYOU WCS PLAN/PROFILE

DESIGNED BY: BB
APPROVED BY: BT

CAMERON CREOLE MAINTENANCE PROJECT STORM DAMAGE REPAIRS

STATE PROJECT NUMBER: CS-004-A
DRAWN BY: REC

DATE: NOV. 07, 2022

SHEET 21 OF 45

NOTES:

1. THE BID QUANTITY OF FILL IS BASED ON SURVEY DATA COLLECTED BY T.BAKER SMITH DURING JUNE AND JULY OF 2022. SEE SHEET 3 FOR QUANTITIES.
2. A TOP WIDTH OF 10' IS REQUIRED FOR TYPICAL RIP RAP SECTIONS UNLESS NOTED OTHERWISE.
3. WOVEN GEOTEXTILE FABRIC TO EXTEND 3' BEYOND PROPOSED FOOTPRINT OF THE RIP RAP BEFORE RIP RAP INSTALLED. NO PAY INCLUDED FOR OVERLAP OF GEOTEXTILE.
4. ELEVATION OF TIE-IN AT TOE OF ROCK WILL BE DICTATED BY SIDE-SLOPE OF ROCK UNLESS NOTED OTHERWISE.
5. EXISTING STRUCTURE ELEVATION AT 5.0'
6. SIDE-SLOPE OF RIP RAP IS 2:1 H:V.
7. MEAN HIGH WATER 1.3', MEAN LOW WATER 0.3'.
8. WHERE THE PROPOSED GEOTEXTILE AND RIP RAP INSTALL IS TO BE IN CONTACT WITH THE EXISTING GRADE, THE AREA SHALL BE CLEANED AND RID OF ANY EXISTING DEBRIS, PRIOR TO INSTALLATION OF THE GEOTEXTILE AND RIP RAP.

PROPOSED

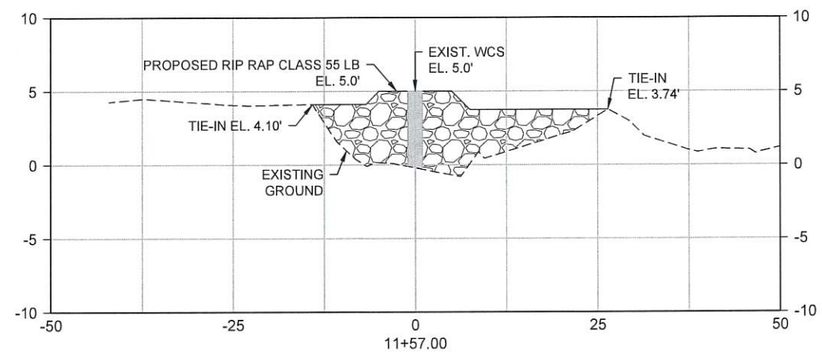

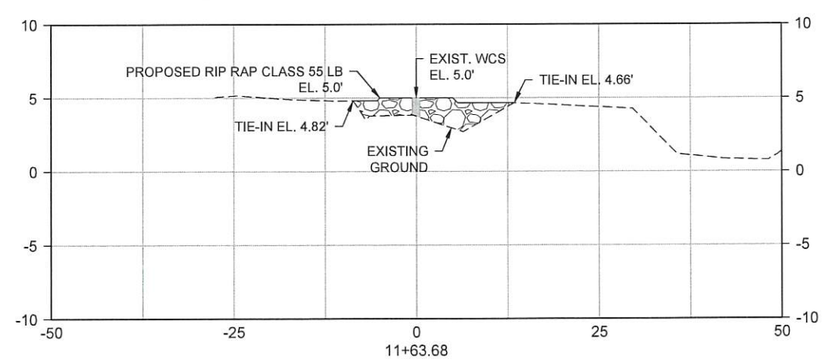

HORIZONTAL GRAPHIC SCALE
20' 10' 0' 20' 40'
10' 5' 0' 10' 20'
VERTICAL GRAPHIC SCALE

STATE OF LOUISIANA
BEAU J. TATE
License No. 30990
4/3/23
PROFESSIONAL ENGINEER

REV.	DATE	DESCRIPTION	BY
2	01/27/23	Final Design Drawings and Construction Plans	BB
1	11/07/22	Preliminary Design Drawings	BB

ROYAL engineering associates
1231 Camellia Boulevard
Lafayette, Louisiana 70508

COASTAL PROTECTION AND RESTORATION AUTHORITY
150 TERRACE AVENUE
BATON ROUGE, LOUISIANA 70802

GRAND BAYOU WCS
CROSS SECTIONS

DESIGNED BY: BB
APPROVED BY: BT

CAMERON CREOLE MAINTENANCE PROJECT
STORM DAMAGE REPAIRS

STATE PROJECT NUMBER: CS-004-A
DRAWN BY: REC

DATE: NOV. 07, 2022

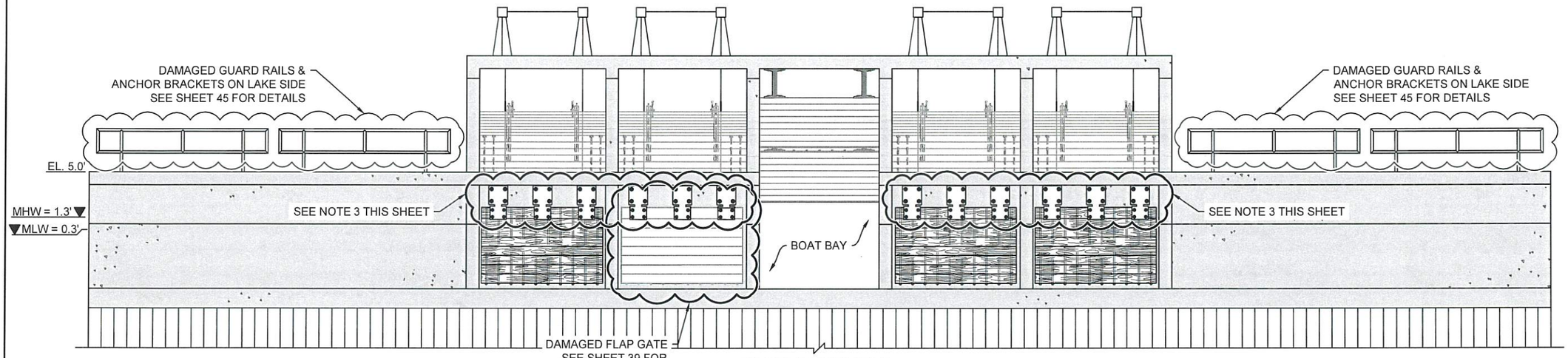

GRAND BAYOU WCS
LAKE SIDE VIEW
NTS

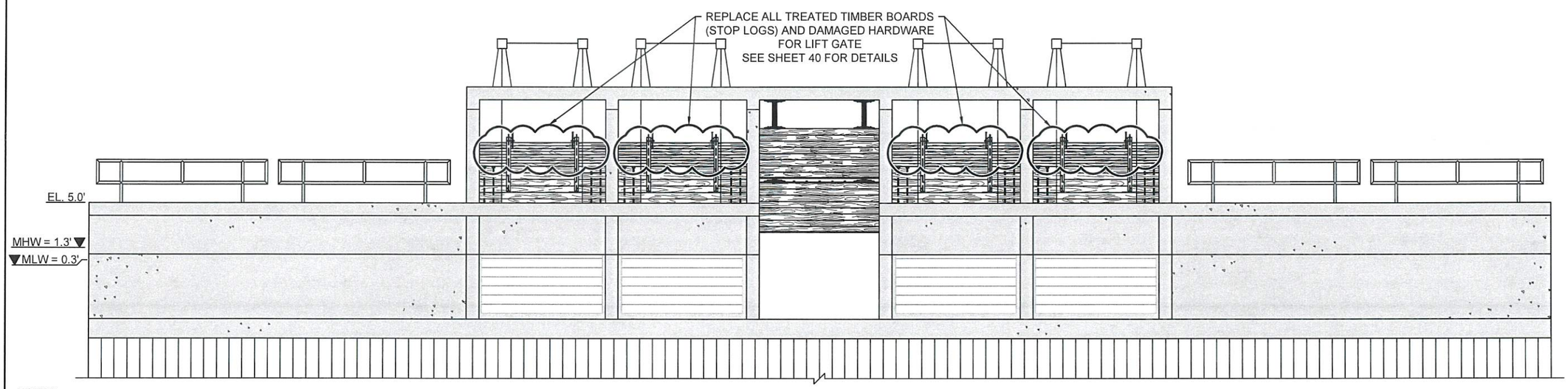

GRAND BAYOU WCS
MARSH SIDE VIEW
NTS

NOTES:

1. PROPOSED WORK ON SHEETS 23 & 24 SHOULD CONSTITUTE ALL OF THE WORK INCLUDED IN BID ITEM NO. 10 "MECHANICAL REPAIRS TO GRAND BAYOU WCS".
2. MECHANICAL REPAIRS TO GRAND BAYOU WCS SHALL BE PERFORMED IN CONFORMANCE WITH TECHNICAL SPECIFICATIONS SECTIONS TS-520 "GATES", TS-802 "FLOATING BUOYS", TS-951 "RAILING", AND TS-980 "METALS".
3. GUARD RAIL AND ASSOCIATED GUARD RAIL ANCHOR BRACKET REPLACEMENT TO BE PERFORMED ON THE FOUR LAKE SIDE GUARD RAILS, AS CALLED OUT IN THE LAKE SIDE PROFILE VIEW, ONLY.
4. CONTRACTOR SHALL FIELD CHECK EXISTING CONDITIONS PRIOR TO CONSTRUCTION.
5. CONTRACTOR TO REPLACE ANY DAMAGED OR CORRODED FASTENERS AND/OR HINGES LOCATED ABOVE THE MEAN LOW WATER LINE SHOWN, WITH 316 STAINLESS STEEL FASTENERS OF EQUIVALENT SIZE AND STRENGTH OF EXISTING.
6. CONTRACTOR SHALL FIELD VERIFY THE PRE-EXISTING ANCHOR POST LOCATIONS AND SPACING DIMENSIONS FOR GUARD RAIL AND/OR FENCE ANCHORING POINTS PRIOR TO BEGINNING WORK, ORDERING AND/OR FABRICATING ITEMS, AND PREPARING SHOP DRAWINGS.

* SEE SHEET 24 FOR BUOY INSTALLATION DETAILS

STATE OF LOUISIANA
BEAU J. TATE
License No. 30990
4/3/23
PROFESSIONAL ENGINEER

BID ITEM No. 10 - SCOPE OF WORK: MECHANICAL REPAIRS TO GRAND BAYOU WCS

ACTION	QUANTITY	ITEM DESCRIPTION
1. Remove & Replace	(32) EACH	Treated timber board for lower gate – 10.6 FT long x 6 IN wide x 3 IN thick
3. Replace	(1) EACH	Rodney Hunt FV-T treated timber flap gate (three hinge connections) OR APPROVED EQUAL – 108 IN long x 60 IN wide
4. Remove & Replace	(4) EACH	Hand/guard-rails –Galvanized steel pipe with posts – 2 IN dia. schedule 40 & 2 IN dia. schedule 80 (fabricated lengths will vary)
5. Remove & Replace	(8) EACH	Anchor bracket for guard rail
6. Replace	(6) EACH	Jim Buoy Mo. 4418 Industrial Float – Industrial floating buoys connected by steel cable
7. Replace	(2) EACH	Jim Buoy Mo. 3000 Regulatory Buoy/Channel Marker w/ Concrete Buoy Anchor (steel cable connection) – Industrial floating buoys connected by steel cable

REV.	DATE	DESCRIPTION	BY
2	01/27/23	Final Design Drawings and Construction Plans	BB
1	11/07/22	Preliminary Design Drawings	BB

ROYAL engineering consultants
1231 Camellia Boulevard
Lafayette, Louisiana 70508

COASTAL PROTECTION AND RESTORATION AUTHORITY
150 TERRACE AVENUE
BATON ROUGE, LOUISIANA 70802

MECHANICAL REPAIRS TO GRAND BAYOU WCS ELEVATION VIEW

DESIGNED BY: BB
APPROVED BY: BT

CAMERON CREOLE MAINTENANCE PROJECT STORM DAMAGE REPAIRS

STATE PROJECT NUMBER: CS-004-A
DRAWN BY: REC

DATE: NOV. 07, 2022

SHEET 23 OF 45

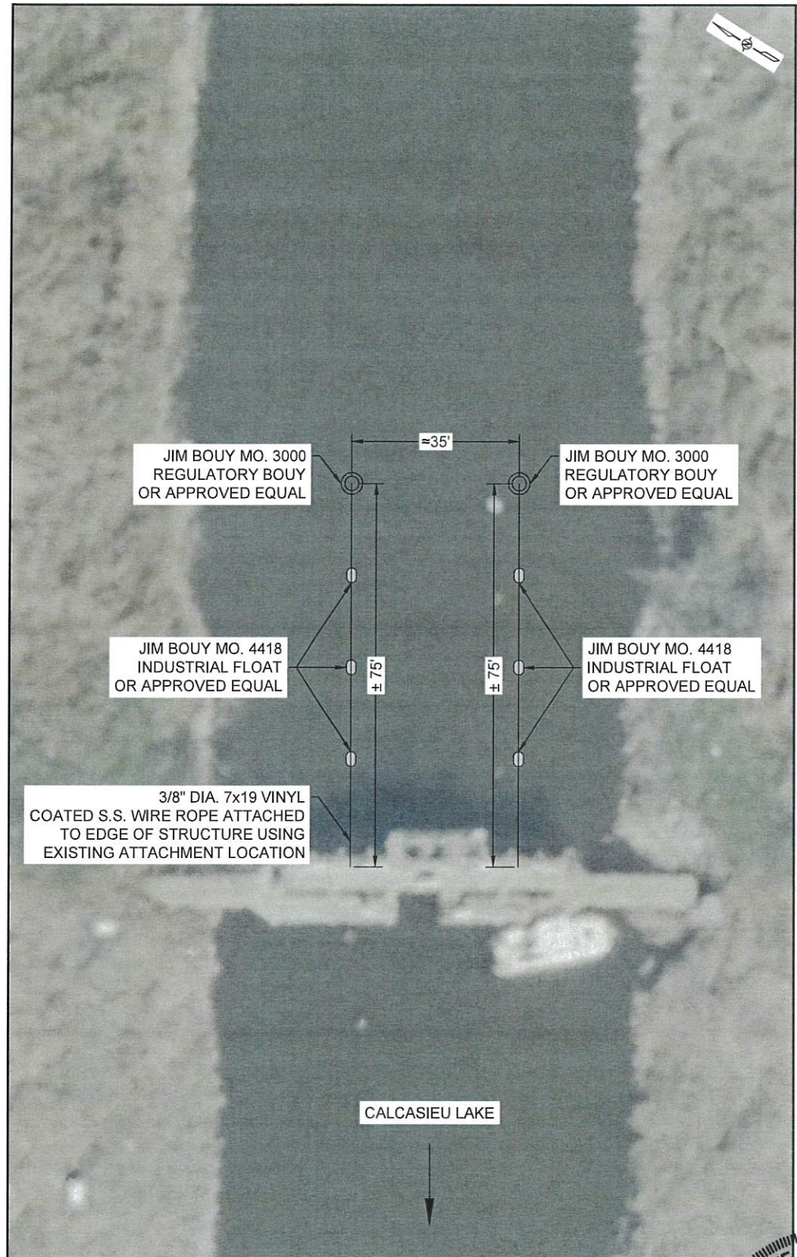

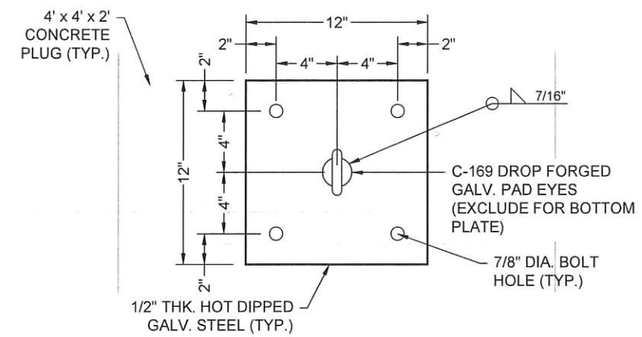

ATTACHMENT PLATE DETAIL
NTS

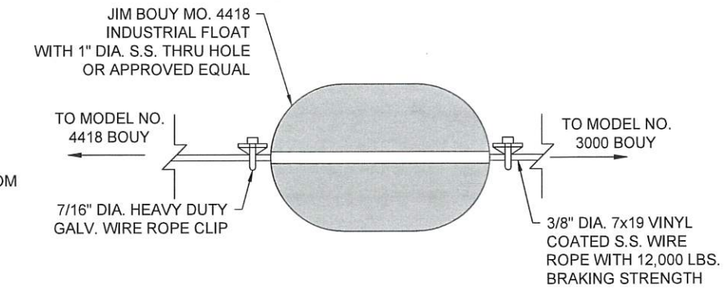

MODEL NO. 4418 BOUY
ATTACHMENT DETAIL
NTS

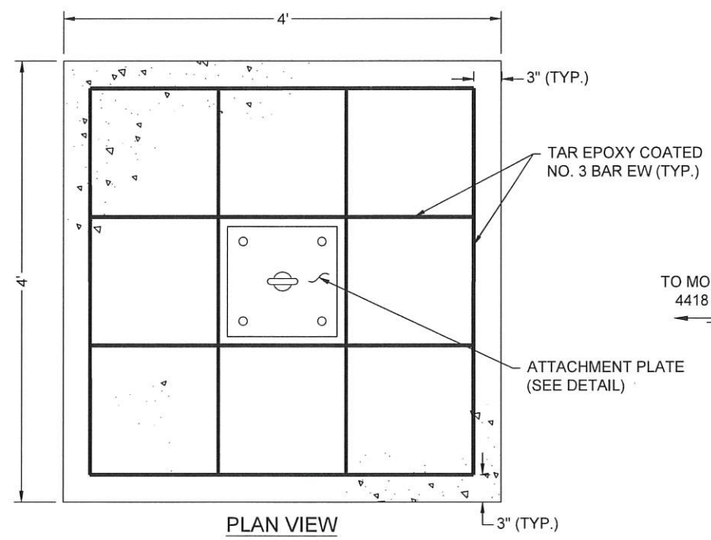

PLAN VIEW

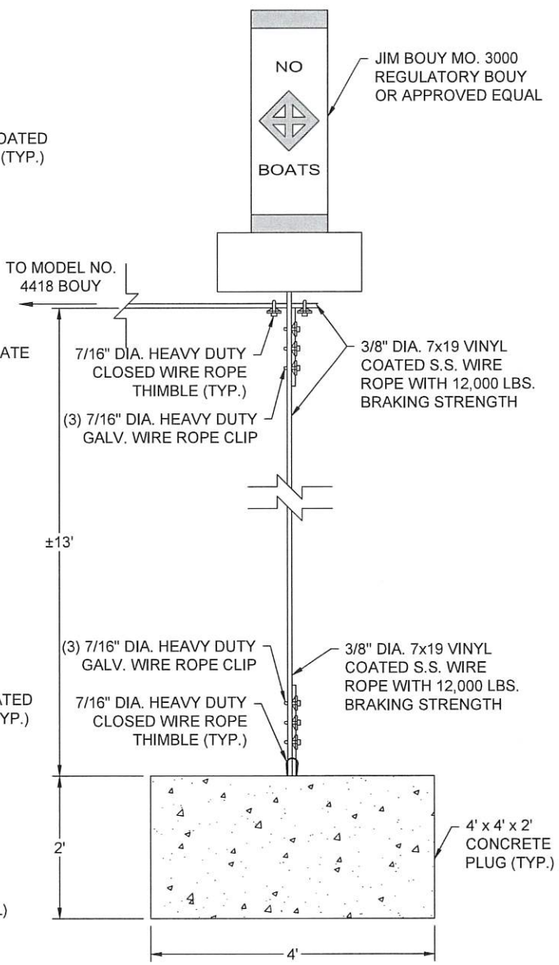

MODEL NO. 3000 BOUY
ATTACHMENT DETAIL
NTS

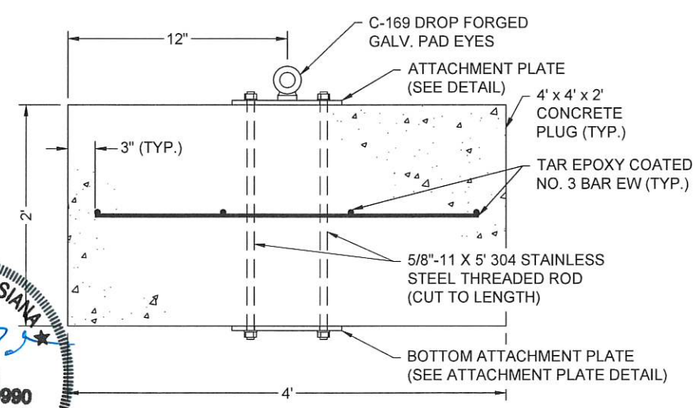

ELEVATION VIEW

MODEL NO. 3000 BOUY
ANCHOR ATTACHMENT DETAIL
NTS

NOTES:

1. PROPOSED WORK ON SHEETS 23 & 24 SHOULD CONSTITUTE ALL OF THE WORK INCLUDED IN BID ITEM NO. 10 MECHANICAL REPAIRS TO GRAND BAYOU WCS.
2. MECHANICAL REPAIRS TO GRAND BAYOU WCS SHALL BE PREFORMED IN CONFORMANCE WITH TECHNICAL SPECIFICATIONS SECTIONS TS-520 "GATES", TS-802 "FLOATING BUOYS", TS-951 "RAILING", AND TS-980 "METALS".
3. REFER TO THE CHART TITLED "MECHANICAL REPAIRS TO GRAND BAYOU WCS" ON SHEET 23, ITEMS 6 & 7 FOR A DESCRIPTION OF THE BUOY WORK.
4. CONTRACTOR SHALL ATTEMPT TO SALVAGE PRE-EXISTING BUOY ASSEMBLY COMPONENTS IF DISCOVERED DURING WORK.

STATE OF LOUISIANA
BEAU J. TATE
License No. 30990
4/3/23
PROFESSIONAL ENGINEER

REV.	DATE	DESCRIPTION	BY
2	01/27/23	Final Design Drawings and Construction Plans	BB
1	11/07/22	Preliminary Design Drawings	BB

ROYAL engineering possibilities
1231 Camellia Boulevard
Lafayette, Louisiana 70508

COASTAL PROTECTION AND RESTORATION AUTHORITY
150 TERRACE AVENUE
BATON ROUGE, LOUISIANA 70802

MECHANICAL REPAIRS TO GRAND BAYOU WCS - BUOY ASSEMBLY AND REPLACEMENT

DESIGNED BY: BB
APPROVED BY: BT

CAMERON CREOLE MAINTENANCE PROJECT STORM DAMAGE REPAIRS

STATE PROJECT NUMBER: CS-004-A
DRAWN BY: REC

DATE: NOV. 07, 2022

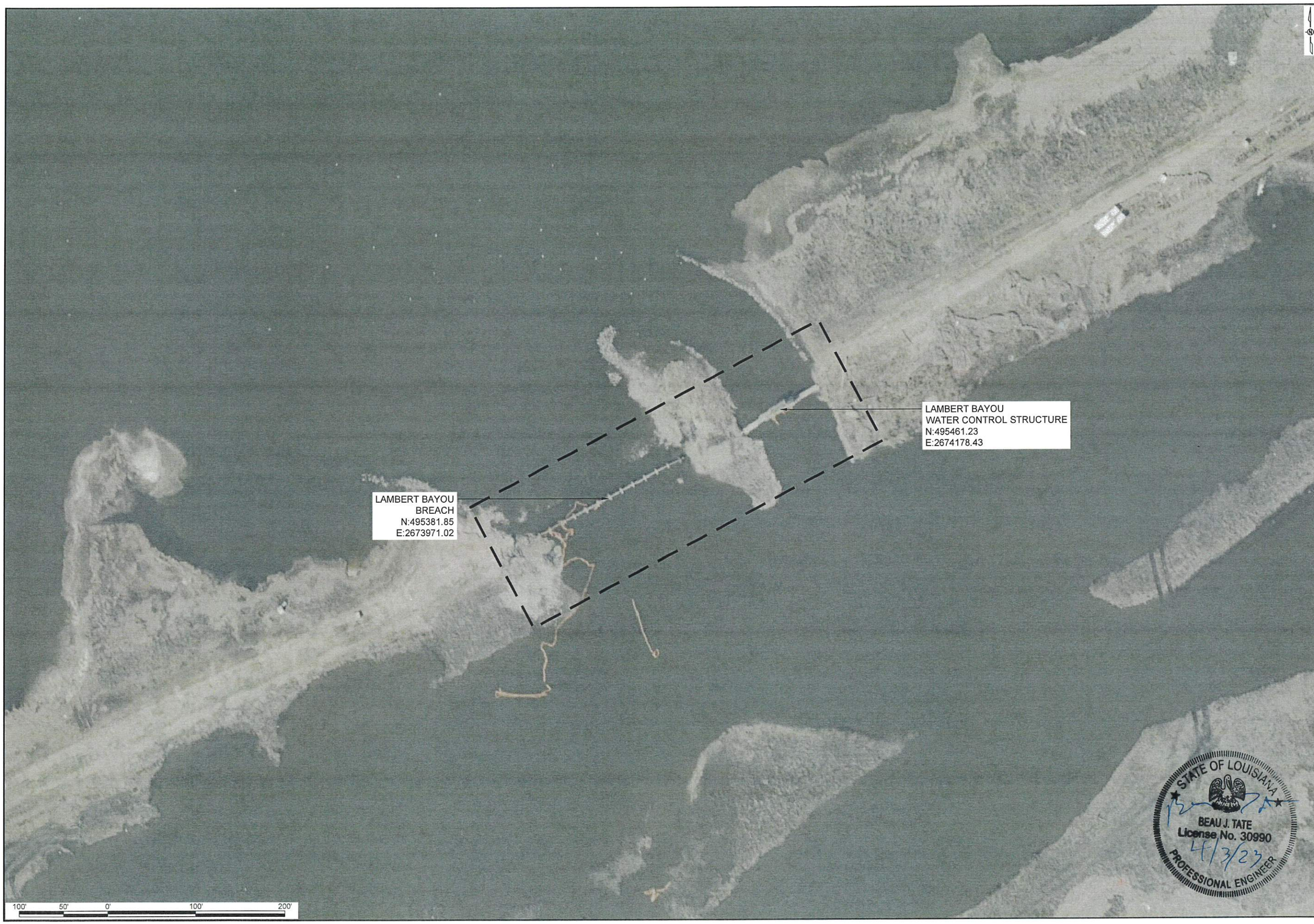

STATE OF LOUISIANA
BEAU J. TATE
License No. 30990
4/3/23
PROFESSIONAL ENGINEER

REV.	DATE	DESCRIPTION	BY
2	01/27/23	Final Design Drawings and Construction Plans	BB
1	11/07/22	Preliminary Design Drawings	BB

ROYAL engineering consultants
1231 Camellia Boulevard
Lafayette, Louisiana 70508

COASTAL PROTECTION AND RESTORATION AUTHORITY
150 TERRACE AVENUE
BATON ROUGE, LOUISIANA 70802

LAMBERT BAYOU PROJECT AREA MAP

DESIGNED BY: BB
APPROVED BY: BT
DRAWN BY: REC

CAMERON CREOLE MAINTENANCE PROJECT STORM DAMAGE REPAIRS

STATE PROJECT NUMBER: CS-004-A

DATE: NOV. 07, 2022

SHEET 25 OF 45

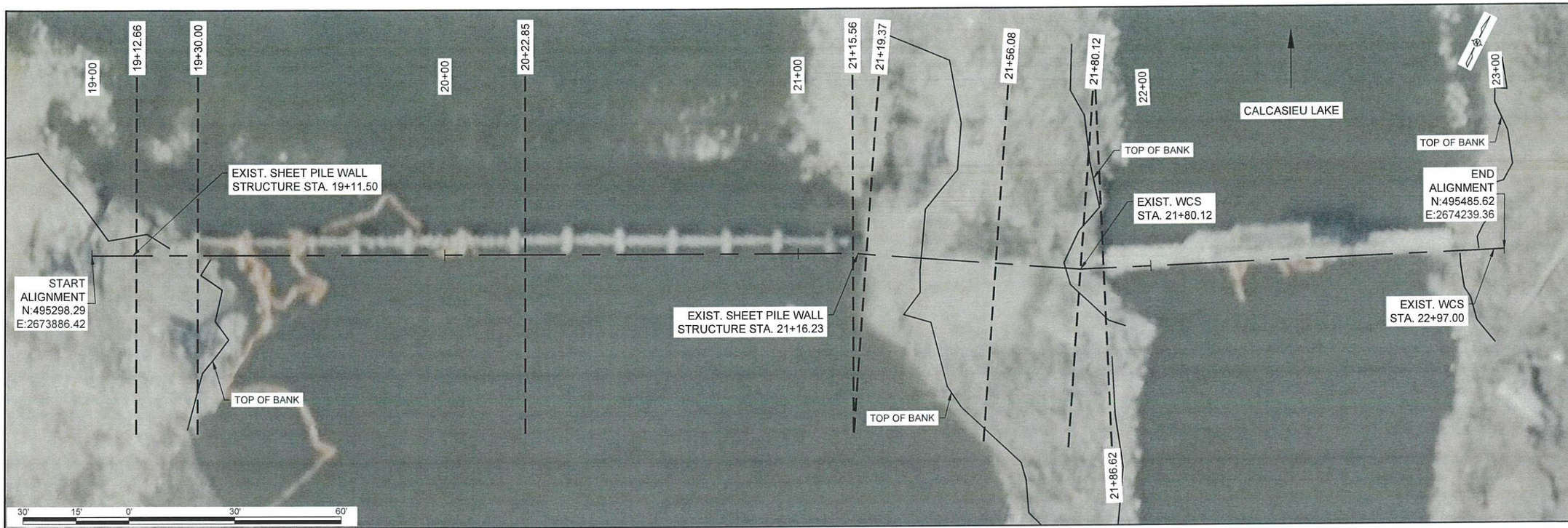

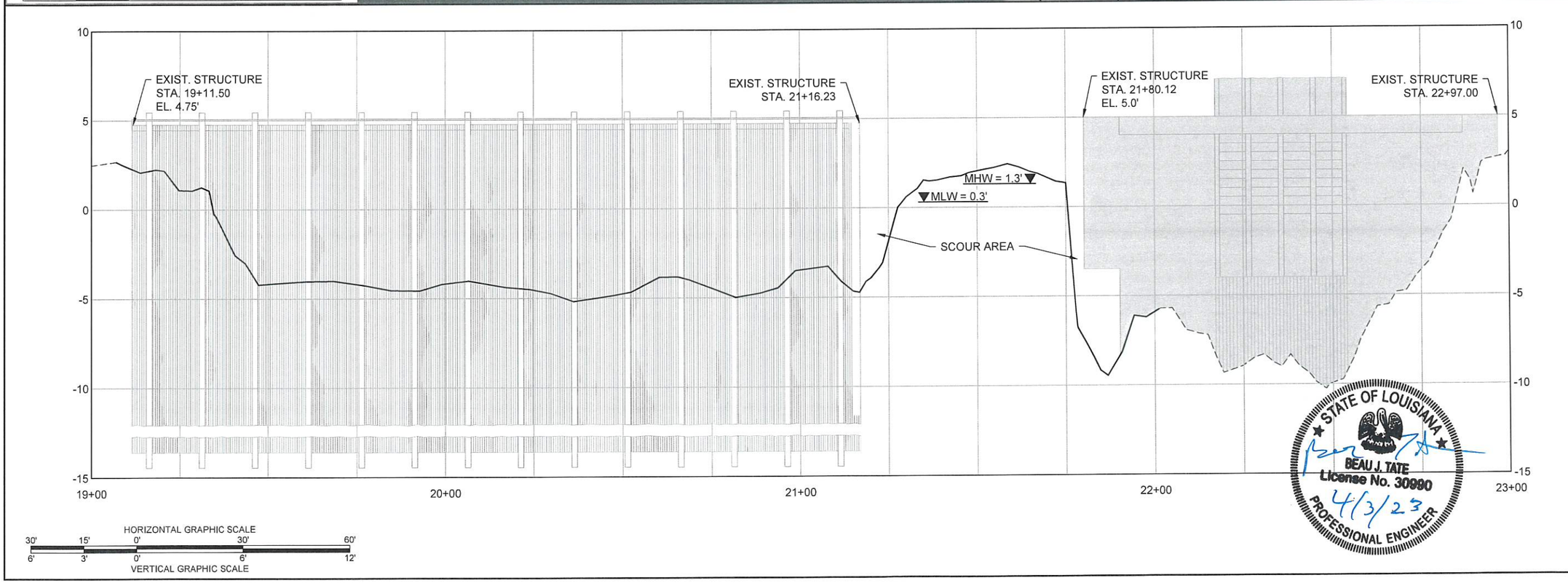

STATE OF LOUISIANA
BEAU J. TATE
License No. 30990
PROFESSIONAL ENGINEER
4/3/23

REV.	DATE	DESCRIPTION	BY
2	01/27/23	Final Design Drawings and Construction Plans	BB
1	11/07/22	Preliminary Design Drawings	BB

ROYAL engineering consultants
1231 Camellia Boulevard
Lafayette, Louisiana 70508

COASTAL PROTECTION AND RESTORATION AUTHORITY
150 TERRACE AVENUE
BATON ROUGE, LOUISIANA 70802

LAMBERT BAYOU BREACH AND WCS PLAN/PROFILE

DESIGNED BY: BB
APPROVED BY: BT

CAMERON CREOLE MAINTENANCE PROJECT STORM DAMAGE REPAIRS

STATE PROJECT NUMBER: CS-004-A
DRAWN BY: REC

DATE: NOV. 07, 2022

SHEET 26 OF 45

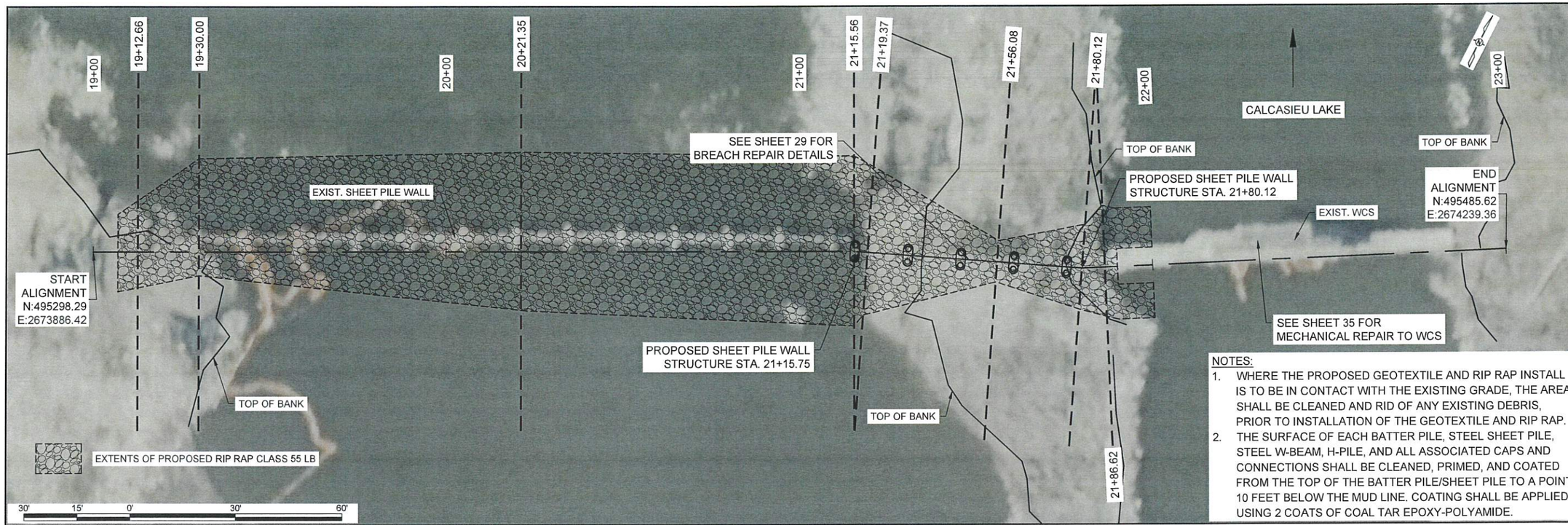

NOTES:

1. WHERE THE PROPOSED GEOTEXTILE AND RIP RAP INSTALL IS TO BE IN CONTACT WITH THE EXISTING GRADE, THE AREA SHALL BE CLEANED AND RID OF ANY EXISTING DEBRIS, PRIOR TO INSTALLATION OF THE GEOTEXTILE AND RIP RAP.
2. THE SURFACE OF EACH BATTER PILE, STEEL SHEET PILE, STEEL W-BEAM, H-PILE, AND ALL ASSOCIATED CAPS AND CONNECTIONS SHALL BE CLEANED, PRIMED, AND COATED FROM THE TOP OF THE BATTER PILE/SHEET PILE TO A POINT 10 FEET BELOW THE MUD LINE. COATING SHALL BE APPLIED USING 2 COATS OF COAL TAR EPOXY-POLYAMIDE.

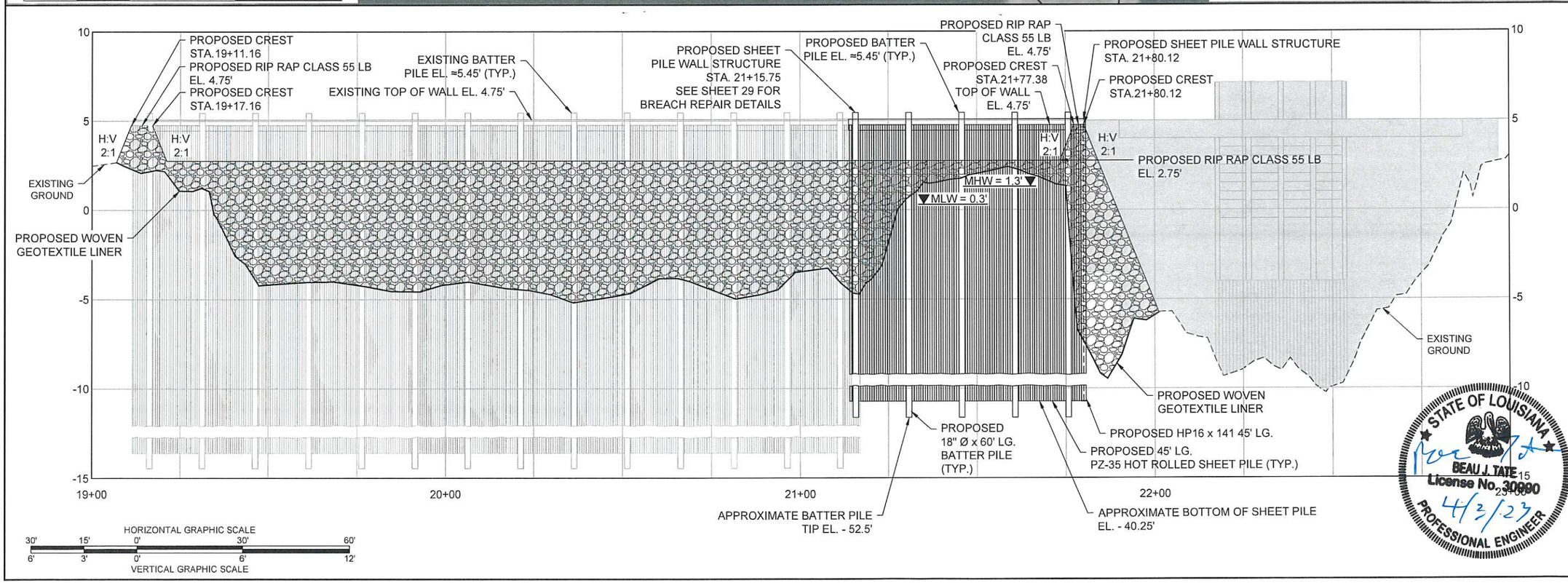

STATE OF LOUISIANA
BEAU J. TATE
License No. 30990
PROFESSIONAL ENGINEER
4/3/23

REV.	DATE	DESCRIPTION	BY
2	01/27/23	Final Design Drawings and Construction Plans	BB
1	11/07/22	Preliminary Design Drawings	BB

ROYAL engineering consultants
1231 Camellia Boulevard
Lafayette, Louisiana 70508

COASTAL PROTECTION AND RESTORATION AUTHORITY
150 TERRACE AVENUE
BATON ROUGE, LOUISIANA 70802

LAMBERT BAYOU BREACH AND WCS PLAN/PROFILE

DESIGNED BY: BB
APPROVED BY: BT

CAMERON CREOLE MAINTENANCE PROJECT STORM DAMAGE REPAIRS

STATE PROJECT NUMBER: CS-004-A
DRAWN BY: REC

DATE: NOV. 07, 2022

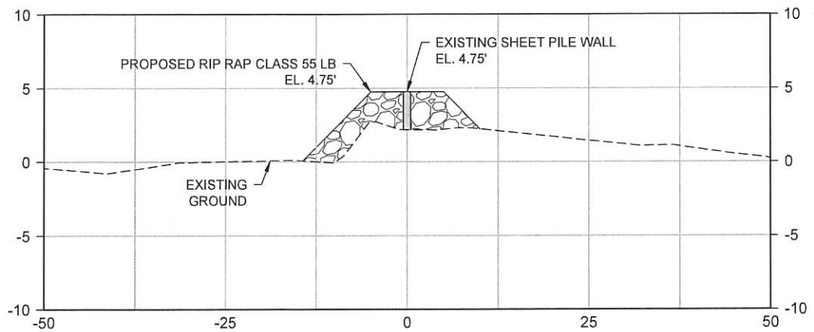

19+12.66

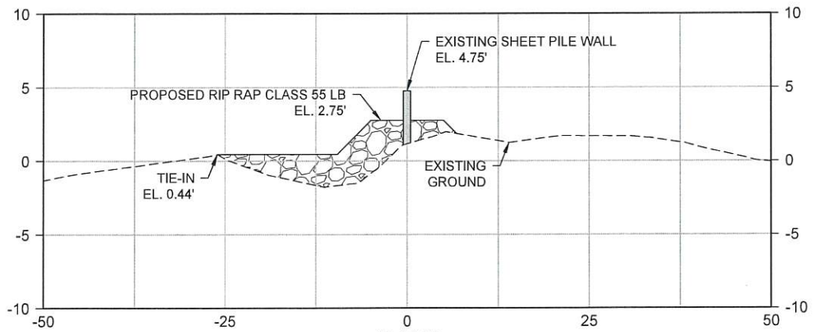

19+30.00

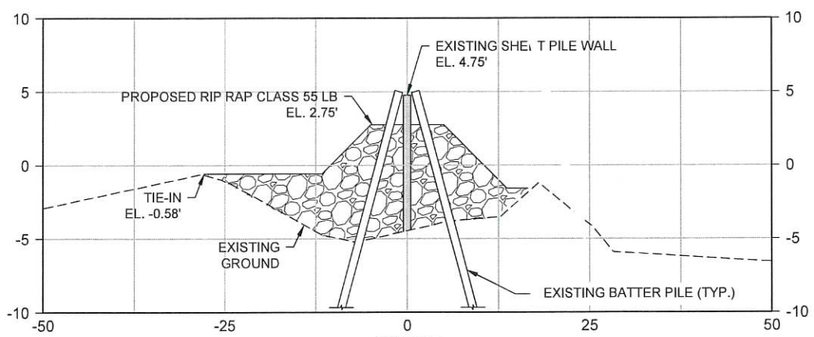

20+21.35

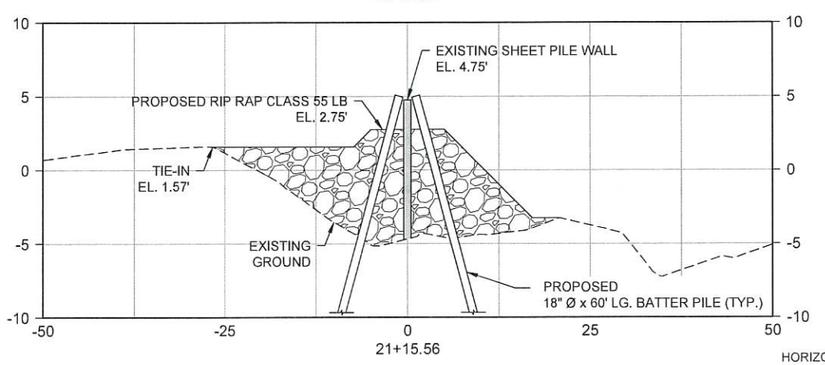

21+15.56

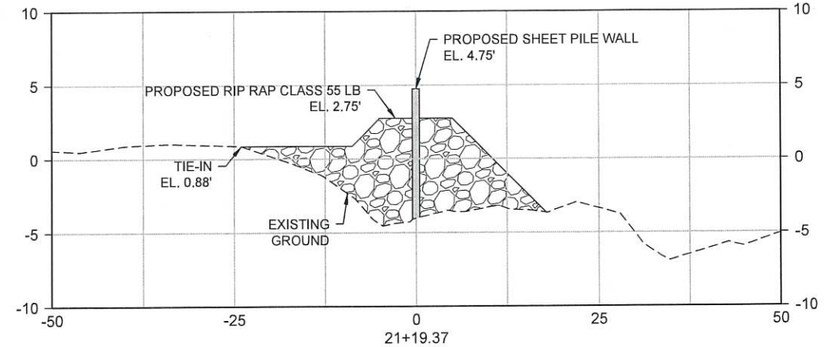

21+19.37

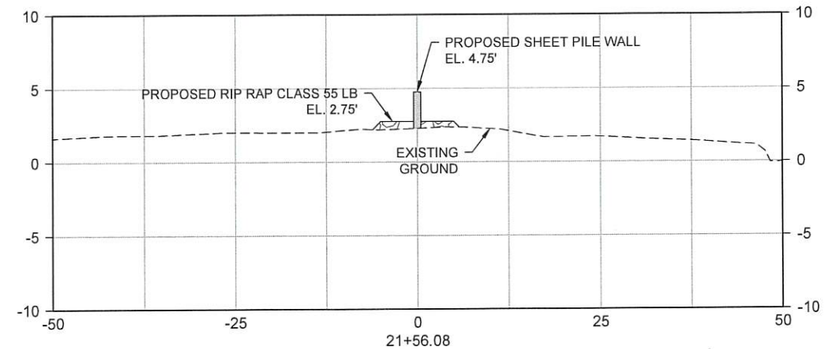

21+56.08

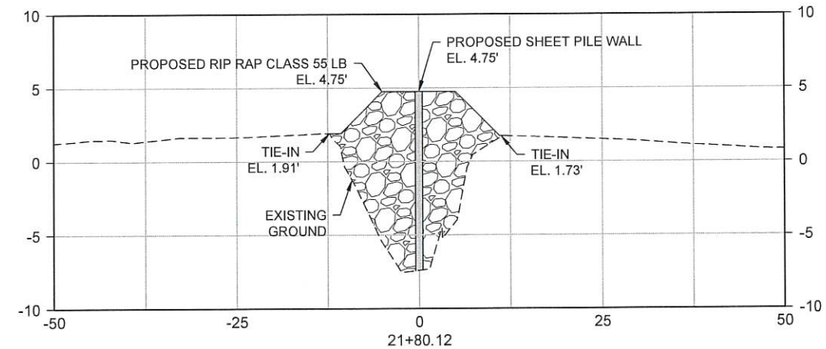

21+80.12

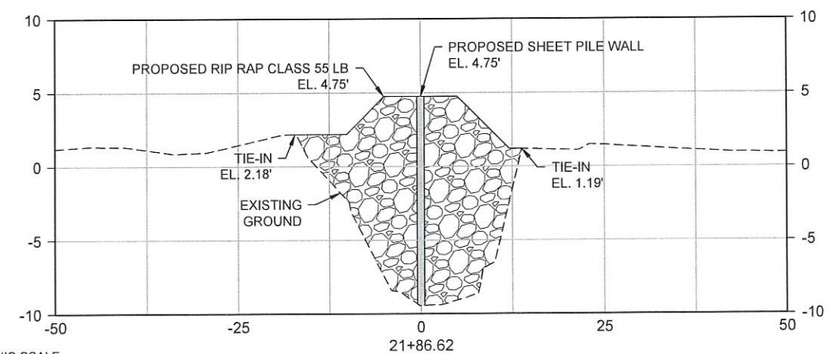

21+86.62

HORIZONTAL GRAPHIC SCALE

20' 10' 0' 20' 40'

10' 5' 0' 10' 20'

VERTICAL GRAPHIC SCALE

NOTES:

1. THE BID QUANTITY OF FILL IS BASED ON SURVEY DATA COLLECTED BY T.BAKER SMITH DURING JUNE AND JULY OF 2022. SEE SHEET 3 FOR QUANTITIES.
2. A TOP WIDTH OF 10' IS REQUIRED FOR TYPICAL RIP RAP SECTIONS UNLESS NOTED OTHERWISE.
3. WOVEN GEOTEXTILE FABRIC TO EXTEND 3' BEYOND PROPOSED FOOTPRINT OF THE RIP RAP BEFORE RIP RAP INSTALLED. NO PAY INCLUDED FOR OVERLAP OF GEOTEXTILE.
4. ELEVATION OF TIE-IN AT TOE OF ROCK WILL BE DICTATED BY SIDE-SLOPE OF ROCK UNLESS NOTED OTHERWISE.
5. EXISTING STRUCTURE ELEVATION AT 4.75"
6. SIDE-SLOPE OF RIP RAP IS 3:1 H:V UNLESS NOTED OTHERWISE.
7. MEAN HIGH WATER 1.3', MEAN LOW WATER 0.3'.
8. ALL EXISTING AND PROPOSED BATTER PILE WALL ANCHORS TO BE COMPLETELY ENCASED BY RIP RAP.
9. ANY ADDITIONAL RIP RAP UTLIZED/INSTALLED THAT EXCEEDS THE AMOUNT LISTED IN THE BID QUANTITIES (SHOWN ON SHEET 2B) WILL BE AT NO PAY TO THE CONTRACTOR.
10. CONTRACTOR SHALL PLACE RIP RAP FROM THE EXISTING AND PROPOSED SHEET PILE WALLS GOING OUTWARD TO ENSURE THAT RIP RAP IS INSTALLED COMPLETELY AROUND ALL EXISTING AND PROPOSED SETS OF BATTER PILES.
11. SECTIONS SHOWING EXISTING AND PROPOSED BATTER PILE LOCATIONS ARE APPROXIMATE ONLY. THE BATTER PILE SPACING SHOWN ON SHEET 29 SHALL TAKE PRECEDENCE IN DICTATING THE ACTUAL SPACING OF PROPOSED BATTER PILES.
12. WHERE THE PROPOSED GEOTEXTILE AND RIP RAP INSTALL IS TO BE IN CONTACT WITH THE EXISTING GRADE, THE AREA SHALL BE CLEANED AND RID OF ANY EXISTING DEBRIS, PRIOR TO INSTALLATION OF THE GEOTEXTILE AND RIP RAP.

STATE OF LOUISIANA
BEAU J. TATE
License No. 30990
PROFESSIONAL ENGINEER
4/3/23

REV.	DATE	DESCRIPTION	BY
2	01/27/23	Final Design Drawings and Construction Plans	BB
1	11/07/22	Preliminary Design Drawings	BB

ROYAL engineering consultants
1231 Camellia Boulevard
Lafayette, Louisiana 70508

COASTAL PROTECTION AND RESTORATION AUTHORITY
150 TERRACE AVENUE
BATON ROUGE, LOUISIANA 70802

LAMBERT BAYOU BREACH AND WCS CROSS SECTIONS

DESIGNED BY: BB
APPROVED BY: BT

CAMERON CREOLE MAINTENANCE PROJECT STORM DAMAGE REPAIRS

STATE PROJECT NUMBER: CS-004-A
DRAWN BY: REC

DATE: NOV. 07, 2022

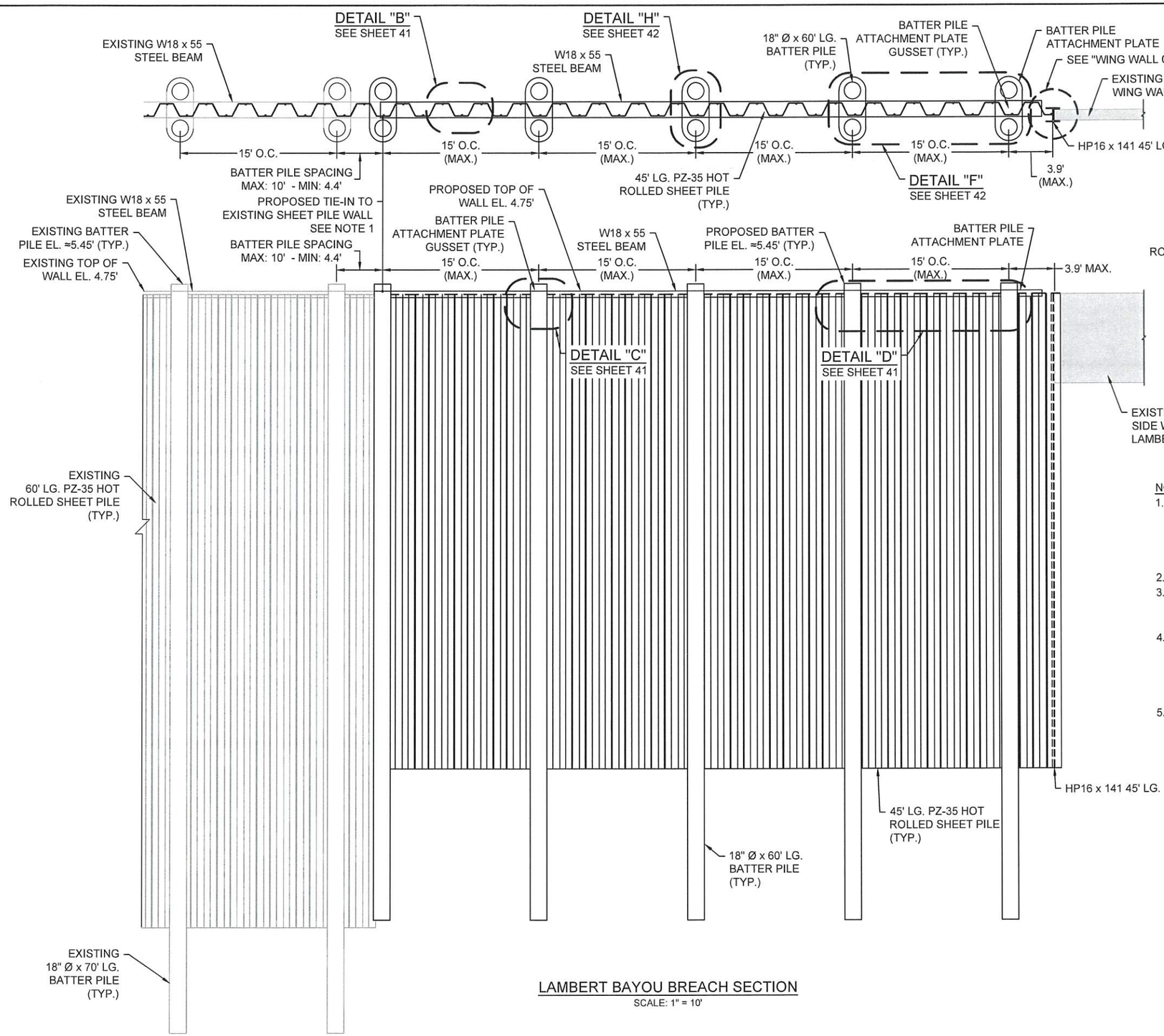

LAMBERT BAYOU BREACH SECTION

SCALE: 1" = 10'

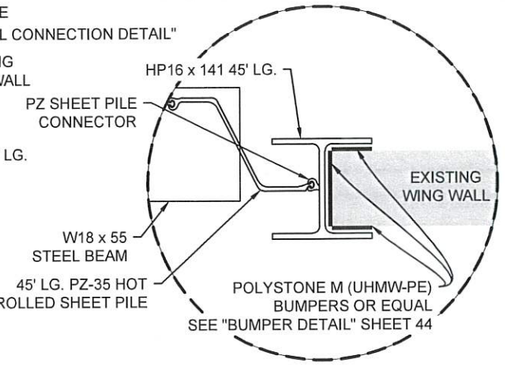

WING WALL CONNECTION DETAIL

NTS

NOTES:

1. CUT BACK EXISTING TOP WHALER AS NEEDED IN ORDER TO OBTAIN A CLEAN KNUCKLE-TO-KNUCKLE TIE-IN OF THE PROPOSED AND EXISTING SHEET PILES. CONTRACTOR SHALL SUBMIT THE PROPOSED SHEET PILE TIE-IN PLAN TO ENGINEER FOR APPROVAL PRIOR TO PERFORMING THE TIE-IN.
2. STEEL PIPE PILES TO BE BATTERED AT A 15° ANGLE.
3. CONTRACTOR SHALL USE EXTREME CAUTION WHILE PERFORMING WORK IN CLOSE PROXIMITY TO THE CONCRETE WATER CONTROL STRUCTURE.
4. ANY DAMAGES THAT OCCUR TO THE WATER CONTROL STRUCTURE DURING THE CONSTRUCTION PERIOD AS A RESULT OF CONSTRUCTION RELATED ACTIVITIES SHALL BE THE RESPONSIBILITY OF THE CONTRACTOR TO REPAIR AT HIS / HER OWN EXPENSE.
5. THE SURFACE OF EACH BATTER PILE, STEEL SHEET PILE, STEEL W-BEAM, H-PILE, AND ALL ASSOCIATED CAPS AND CONNECTIONS SHALL BE CLEANED, PRIMED, AND COATED FROM THE TOP OF THE BATTER PILE/SHEET PILE TO A POINT 10 FEET BELOW THE MUD LINE. COATING SHALL BE APPLIED USING 2 COATS OF COAL TAR EPOXY-POLYAMIDE.

STATE OF LOUISIANA
BEAU J. TATE
License No. 30990
PROFESSIONAL ENGINEER
4/3/23

REV.	DATE	DESCRIPTION	BY
2	01/27/23	Final Design Drawings and Construction Plans	BB
1	11/07/22	Preliminary Design Drawings	BB

ROYAL engineering consultants
1231 Camellia Boulevard
Lafayette, Louisiana 70508

COASTAL PROTECTION AND RESTORATION AUTHORITY
150 TERRACE AVENUE
BATON ROUGE, LOUISIANA 70802

LAMBERT BAYOU BREACH REPAIR PLAN AND SECTION

DESIGNED BY: BB
APPROVED BY: BT

CAMERON CREOLE MAINTENANCE PROJECT STORM DAMAGE REPAIRS

STATE PROJECT NUMBER: CS-004-A
DRAWN BY: REC

DATE: NOV. 07, 2022

SHEET 29 OF 45

NOTES:

1. PROPOSED WORK ON SHEET 30 SHALL CONSTITUTE ALL OF THE WORK INCLUDED IN BID ITEM NO. 17 "REPAIRS TO LAMBERT BAYOU WCS".
2. MECHANICAL REPAIRS TO GRAND BAYOU WCS SHALL BE PERFORMED IN CONFORMANCE WITH TECHNICAL SPECIFICATIONS SECTIONS TS-951 "RAILING", TS-952 "STAIRS", AND TS-980 "METALS".
3. CONTRACTOR SHALL FIELD VERIFY THE PRE-EXISTING ANCHOR POST LOCATIONS AND SPACING DIMENSIONS FOR GAURD RAIL AND/OR FENCE ANCHORING POINTS PRIOR TO BEGINNING WORK, ORDERING AND/OR FABRICATING ITEMS, AND PREPARING SHOP DRAWINGS.

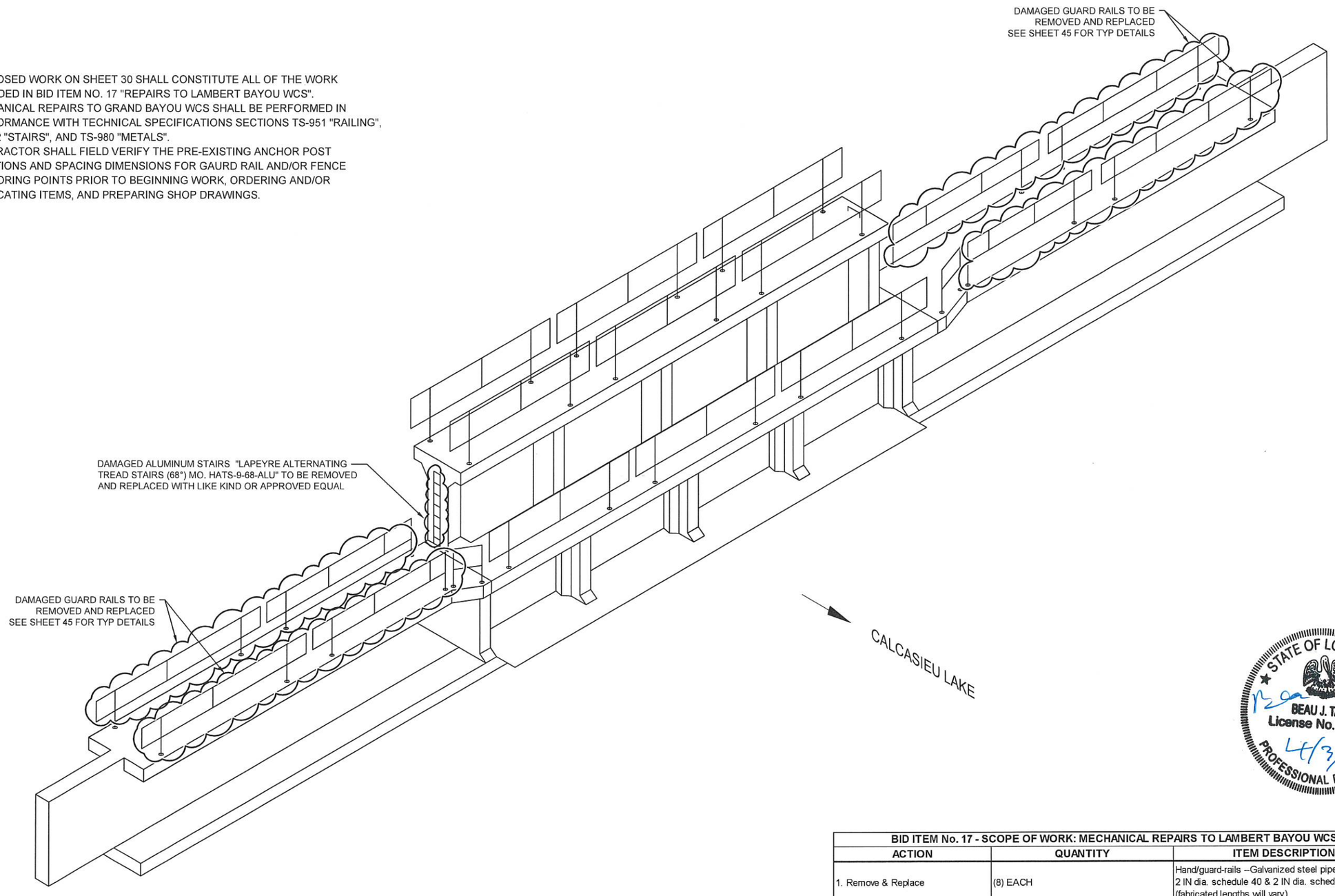

STATE OF LOUISIANA
BEAU J. TATE
License No. 30990
PROFESSIONAL ENGINEER
4/3/23

BID ITEM No. 17 - SCOPE OF WORK: MECHANICAL REPAIRS TO LAMBERT BAYOU WCS		
ACTION	QUANTITY	ITEM DESCRIPTION
1. Remove & Replace	(8) EACH	Hand/guard-rails --Galvanized steel pipe with posts -- 2 IN dia. schedule 40 & 2 IN dia. schedule 80 (fabricated lengths will vary)
2. Remove & Replace	(16) EACH	Anchor bracket for guard rail
3. Remove & Replace	(1) EACH	LAPEYRE Aternating Tread Stairs (68 Degree) OR APPROVED EQUAL -- Aluminum alternating tread stair w/ standard handrail --108 IN high

*SEE SHEET 45 FOR GUARD RAIL AND ANCHOR BRACKET.

REV.	DATE	DESCRIPTION	BY
2	01/27/23	Final Design Drawings and Construction Plans	BB
1	11/07/22	Preliminary Design Drawings	BB

ROYAL engineering consultants
1231 Camellia Boulevard
Lafayette, Louisiana 70508

COASTAL PROTECTION AND RESTORATION AUTHORITY
150 TERRACE AVENUE
BATON ROUGE, LOUISIANA 70802

MECHANICAL REPAIRS TO LAMBERT BAYOU WCS

DESIGNED BY: BB
APPROVED BY: BT

CAMERON CREOLE MAINTENANCE PROJECT STORM DAMAGE REPAIRS

STATE PROJECT NUMBER: CS-004-A
DRAWN BY: REC

DATE: NOV. 07, 2022

STATE OF LOUISIANA
BEAU J. TATE
License No. 30990
4/3/23
PROFESSIONAL ENGINEER

REV.	DATE	DESCRIPTION	BY
2	01/27/23	Final Design Drawings and Construction Plans	BB
1	11/07/22	Preliminary Design Drawings	BB

ROYAL engineering consultants
1231 Camellia Boulevard
Lafayette, Louisiana 70508

COASTAL PROTECTION AND RESTORATION AUTHORITY
150 TERRACE AVENUE
BATON ROUGE, LOUISIANA 70802

NO NAME BAYOU PROJECT AREA MAP

DESIGNED BY: BB
APPROVED BY: BT

CAMERON CREOLE MAINTENANCE PROJECT STORM DAMAGE REPAIRS

STATE PROJECT NUMBER: CS-004-A
DRAWN BY: REC

DATE: NOV. 07, 2022

SHEET 31 OF 45

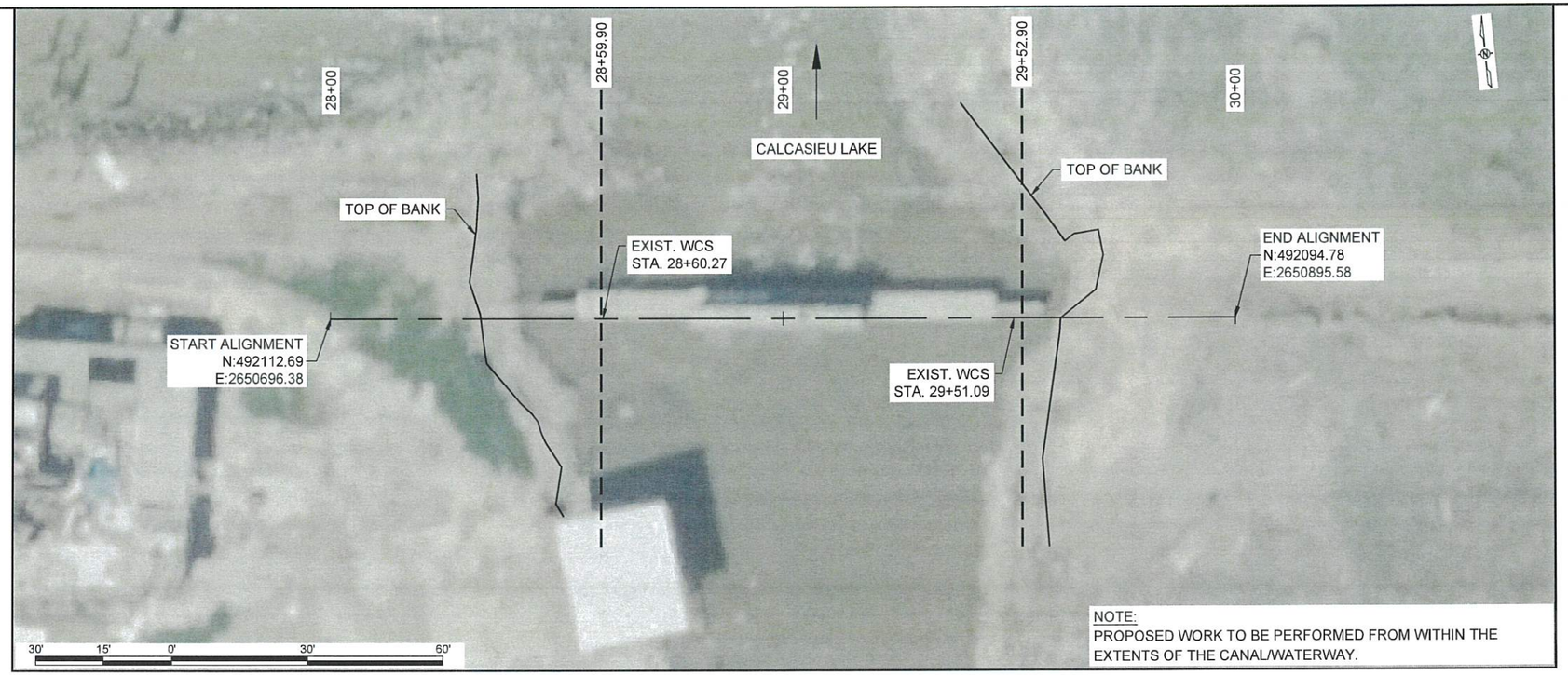

NOTE:
PROPOSED WORK TO BE PERFORMED FROM WITHIN THE EXTENTS OF THE CANAL/WATERWAY.

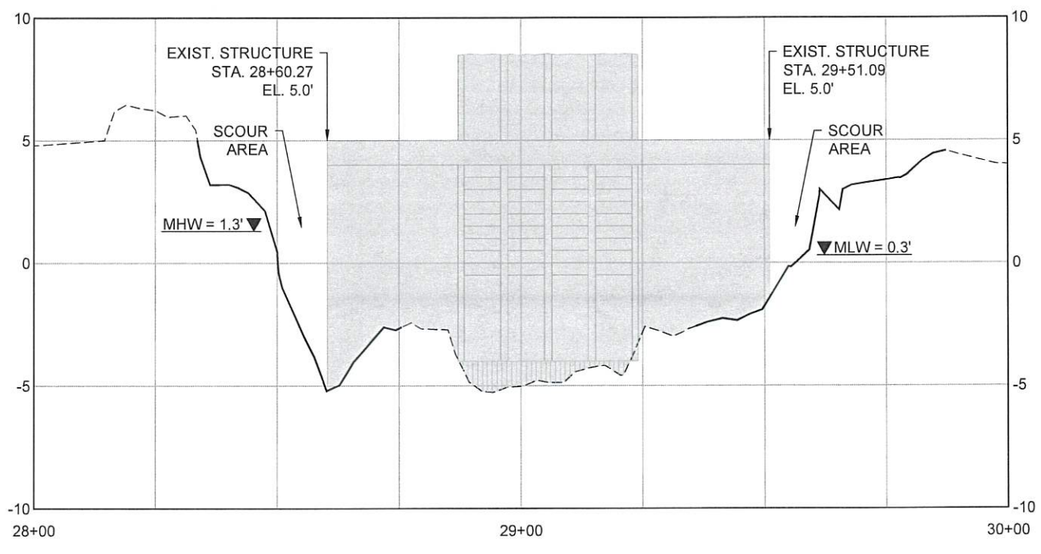

HORIZONTAL GRAPHIC SCALE
30' 15' 0' 30' 60'
6' 3' 0' 6' 12'
VERTICAL GRAPHIC SCALE

STATE OF LOUISIANA
BEAU J. TATE
License No. 30990
4/3/23
PROFESSIONAL ENGINEER

REV.	DATE	DESCRIPTION	BY
2	01/27/23	Final Design Drawings and Construction Plans	BB
1	11/07/22	Preliminary Design Drawings	BB

ROYAL engineering consultants
1231 Camellia Boulevard
Lafayette, Louisiana 70508

COASTAL PROTECTION AND RESTORATION AUTHORITY
150 TERRACE AVENUE
BATON ROUGE, LOUISIANA 70802

EXISTING
NO NAME BAYOU WCS
PLAN/PROFILE

DESIGNED BY: BB
APPROVED BY: BT

CAMERON CREOLE
MAINTENANCE PROJECT
STORM DAMAGE REPAIRS

STATE PROJECT NUMBER: CS-004-A
DRAWN BY: REC

DATE: NOV. 07, 2022

SHEET 32 OF 45

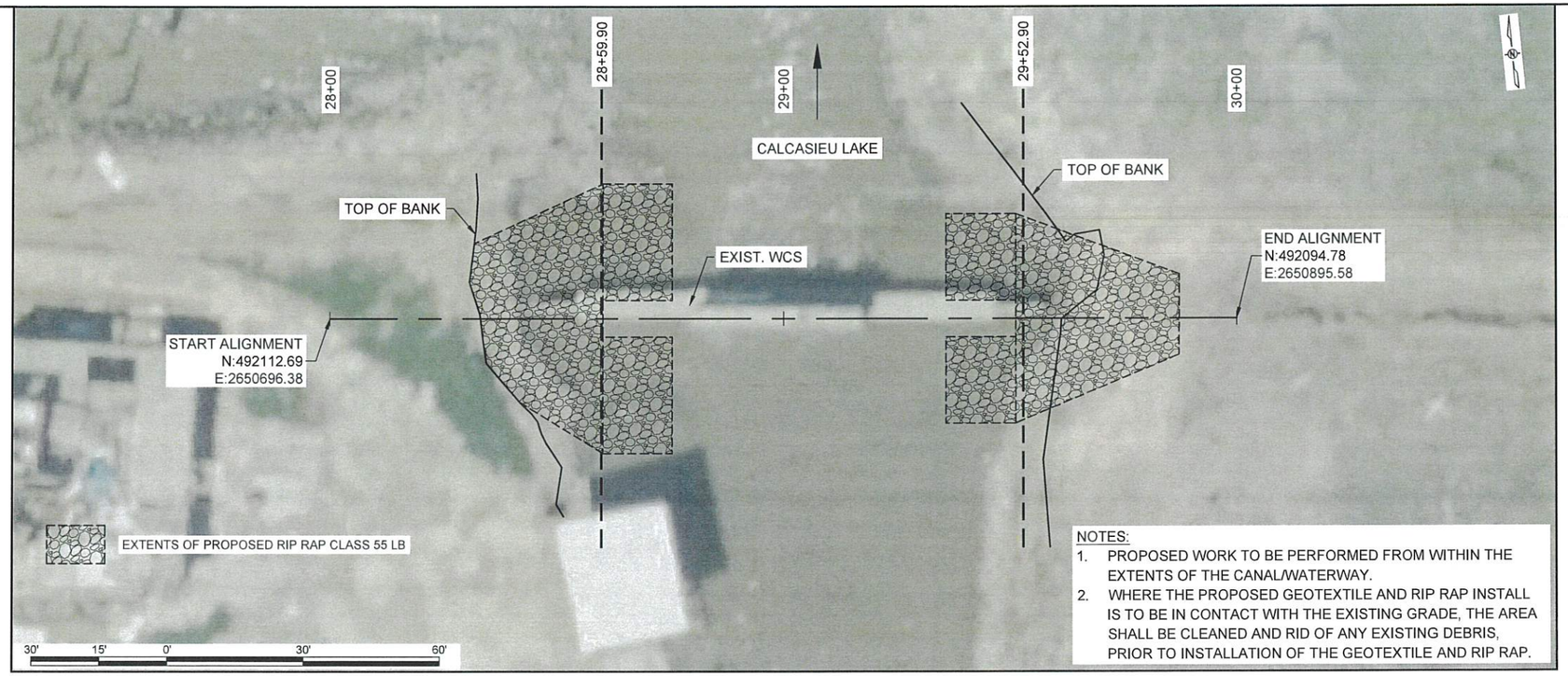

NOTES:

1. PROPOSED WORK TO BE PERFORMED FROM WITHIN THE EXTENTS OF THE CANAL/WATERWAY.
2. WHERE THE PROPOSED GEOTEXTILE AND RIP RAP INSTALL IS TO BE IN CONTACT WITH THE EXISTING GRADE, THE AREA SHALL BE CLEANED AND RID OF ANY EXISTING DEBRIS, PRIOR TO INSTALLATION OF THE GEOTEXTILE AND RIP RAP.

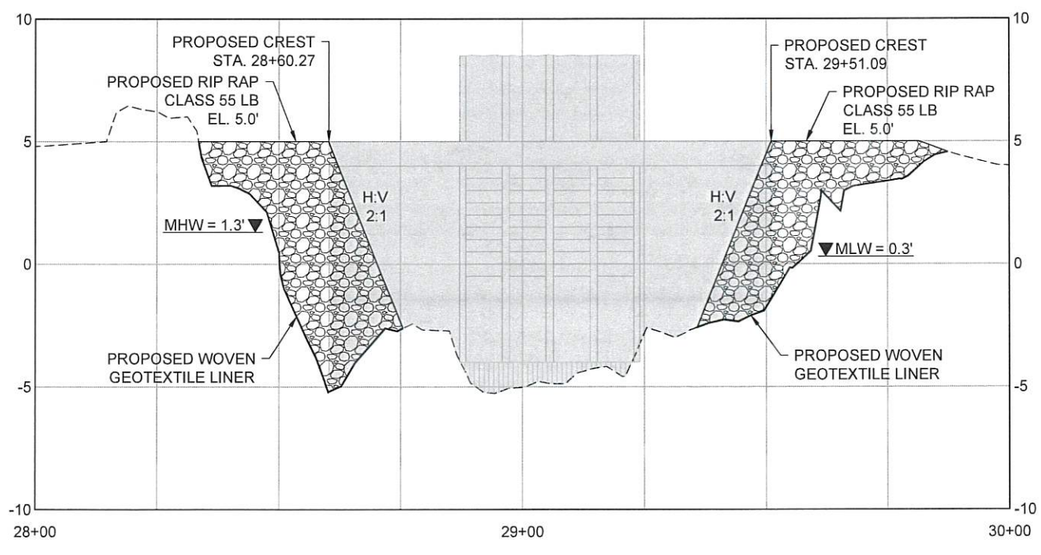

HORIZONTAL GRAPHIC SCALE
30' 15' 0' 30' 60'
6' 3' 0' 6' 12'
VERTICAL GRAPHIC SCALE

STATE OF LOUISIANA
BEAU J. TATE
License No. 30990
4/3/23
PROFESSIONAL ENGINEER

REV.	DATE	DESCRIPTION	BY
2	01/27/23	Final Design Drawings and Construction Plans	BB
1	11/07/22	Preliminary Design Drawings	BB

ROYAL engineering consultants
1231 Camellia Boulevard
Lafayette, Louisiana 70508

COASTAL PROTECTION AND RESTORATION AUTHORITY
150 TERRACE AVENUE
BATON ROUGE, LOUISIANA 70802

PROPOSED
NO NAME BAYOU WCS
PLAN/PROFILE

DESIGNED BY: BB
APPROVED BY: BT

CAMERON CREOLE
MAINTENANCE PROJECT
STORM DAMAGE REPAIRS

STATE PROJECT NUMBER: CS-004-A
DRAWN BY: REC

DATE: NOV. 07, 2022

SHEET 33 OF 45

NOTES:

1. THE BID QUANTITY OF FILL IS BASED ON SURVEY DATA COLLECTED BY T.BAKER SMITH DURING JUNE AND JULY OF 2022. SEE SHEET 3 FOR QUANTITIES.
2. A TOP WIDTH OF 10' IS REQUIRED FOR TYPICAL RIP RAP SECTIONS UNLESS NOTED OTHERWISE.
3. WOVEN GEOTEXTILE FABRIC TO EXTEND 3' BEYOND PROPOSED FOOTPRINT OF THE RIP RAP BEFORE RIP RAP INSTALLED. NO PAY INCLUDED FOR OVERLAP OF GEOTEXTILE.
4. ELEVATION OF TIE-IN AT TOE OF ROCK WILL BE DICTATED BY SIDE-SLOPE OF ROCK UNLESS NOTED OTHERWISE.
5. EXISTING STRUCTURE ELEVATION AT 5.0'
6. SIDE-SLOPE OF RIP RAP IS 3:1 H:V UNLESS NOTED OTHERWISE.
7. MEAN HIGH WATER 1.3', MEAN LOW WATER 0.3'.
8. WHERE THE PROPOSED GEOTEXTILE AND RIP RAP INSTALL IS TO BE IN CONTACT WITH THE EXISTING GRADE, THE AREA SHALL BE CLEANED AND RID OF ANY EXISTING DEBRIS, PRIOR TO INSTALLATION OF THE GEOTEXTILE AND RIP RAP.

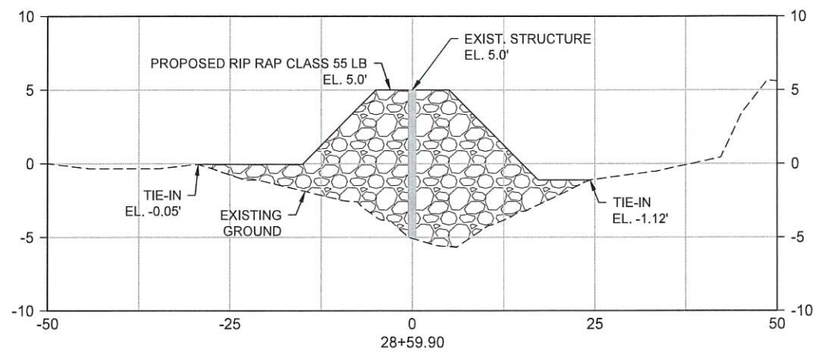

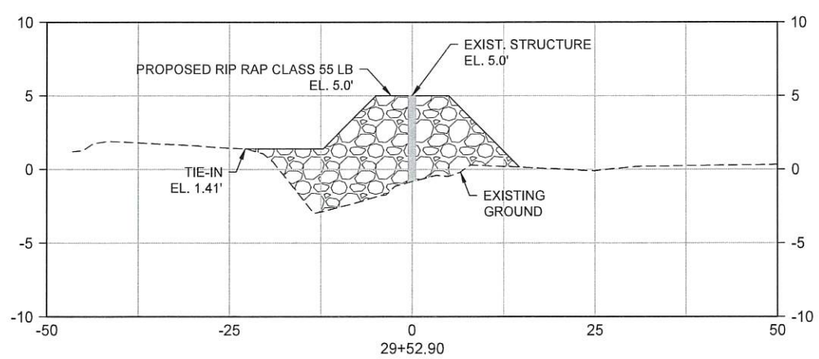

HORIZONTAL GRAPHIC SCALE
20' 10' 0' 20' 40'
10' 5' 0' 10' 20'
VERTICAL GRAPHIC SCALE

STATE OF LOUISIANA
BEAU J. TATE
License No. 30990
PROFESSIONAL ENGINEER
4/3/23

REV.	DATE	DESCRIPTION	BY
2	01/27/23	Final Design Drawings and Construction Plans	BB
1	11/07/22	Preliminary Design Drawings	BB

ROYAL engineering consultants
1231 Camellia Boulevard
Lafayette, Louisiana 70508

COASTAL PROTECTION AND RESTORATION AUTHORITY
150 TERRACE AVENUE
BATON ROUGE, LOUISIANA 70802

NO NAME BAYOU
WCS
CROSS SECTIONS

DESIGNED BY: BB
APPROVED BY: BT

CAMERON CREOLE
MAINTENANCE PROJECT
STORM DAMAGE REPAIRS

STATE PROJECT NUMBER: CS-004-A
DRAWN BY: REC

DATE: NOV. 07, 2022

SHEET 34 OF 45

NOTES:

1. PROPOSED WORK ON SHEET 35 SHALL CONSTITUTE ALL OF THE WORK INCLUDED IN BID ITEM NO. 22 "MECHANICAL REPAIRS TO NO NAME BAYOU WCS".
2. MECHANICAL REPAIRS TO NO NAME BAYOU WCS SHALL BE PERFORMED IN CONFORMANCE WITH TECHNICAL SPECIFICATIONS SECTIONS TS-950 "FENCING", TS-951 "RAILING", AND TS-980 "METALS".
3. CONTRACTOR SHALL REMOVE AND DISPOSE OF EXISTING FENCE COMPONENTS REMAINING ON AND AROUND THE STRUCTURE.
4. CONTRACTOR SHALL FIELD VERIFY THE PRE-EXISTING ANCHOR POST LOCATIONS AND SPACING DIMENSIONS FOR GUARD RAIL AND/OR FENCE ANCHORING POINTS PRIOR TO BEGINNING WORK, ORDERING AND/OR FABRICATING ITEMS, AND PREPARING SHOP DRAWINGS.

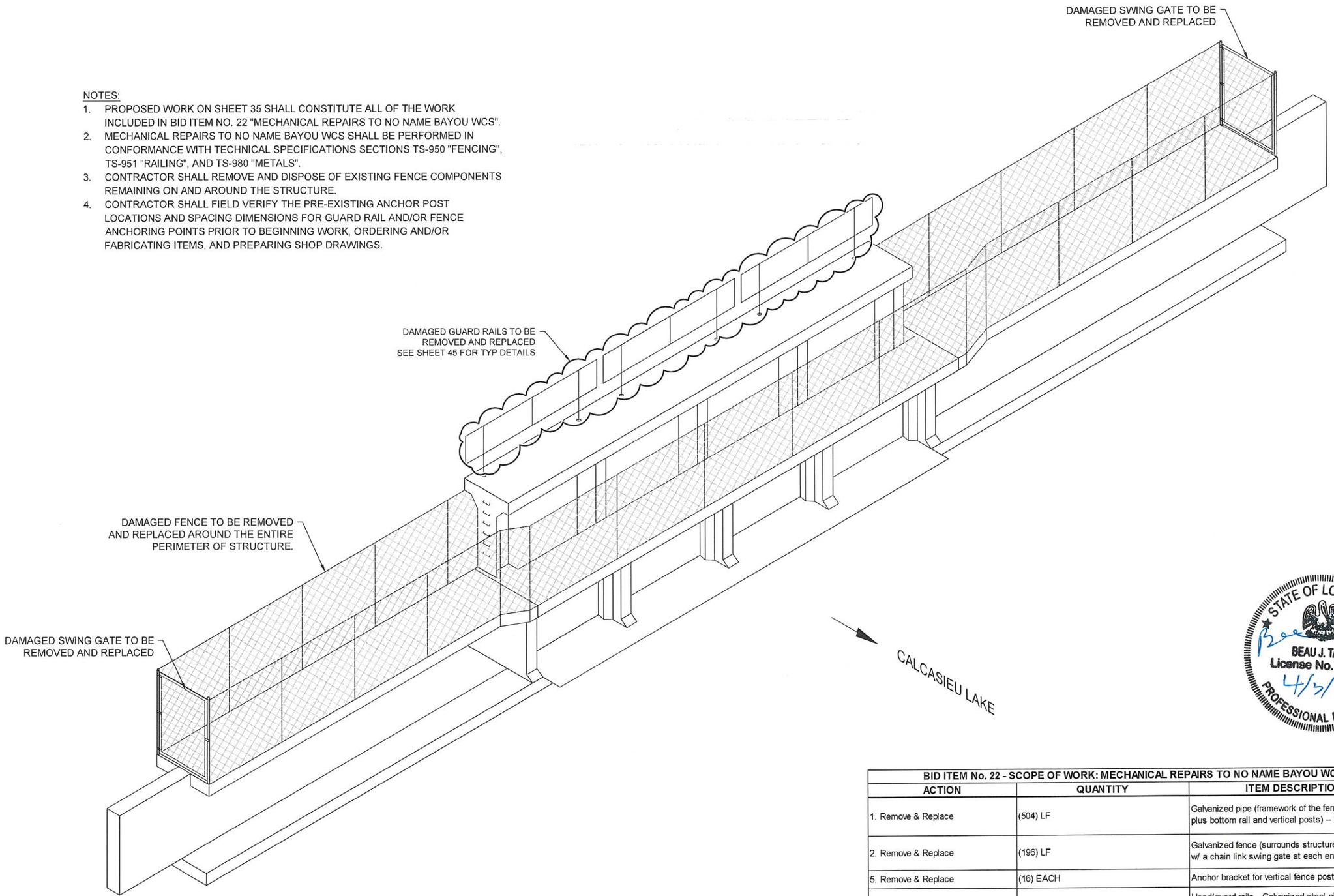

BID ITEM No. 22 - SCOPE OF WORK: MECHANICAL REPAIRS TO NO NAME BAYOU WCS		
ACTION	QUANTITY	ITEM DESCRIPTION
1. Remove & Replace	(504) LF	Galvanized pipe (framework of the fence including top plus bottom rail and vertical posts) -- 2 IN dia.
2. Remove & Replace	(196) LF	Galvanized fence (surrounds structure) -- 6 FT height w/ a chain link swing gate at each end (2 gates)
5. Remove & Replace	(16) EACH	Anchor bracket for vertical fence posts
4. Remove & Replace	(3) EACH	Hand/guard-rails --Galvanized steel pipe with posts -- 2 IN dia. schedule 40 & 2 IN dia. schedule 80 (fabricated lengths will vary)
5. Remove & Replace	(6) EACH	Anchor bracket for guard rail

STATE OF LOUISIANA
BEAU J. TATE
License No. 30990
4/3/23
PROFESSIONAL ENGINEER

REV.	DATE	DESCRIPTION	BY
2	01/27/23	Final Design Drawings and Construction Plans	BB
1	11/07/22	Preliminary Design Drawings	BB

ROYAL engineering consultants
1231 Camellia Boulevard
Lafayette, Louisiana 70508

COASTAL PROTECTION AND RESTORATION AUTHORITY
150 TERRACE AVENUE
BATON ROUGE, LOUISIANA 70802

MECHANICAL REPAIRS TO NO NAME BAYOU WCS

DESIGNED BY: BB
APPROVED BY: BT

CAMERON CREOLE MAINTENANCE PROJECT STORM DAMAGE REPAIRS

STATE PROJECT NUMBER: CS-004-A
DRAWN BY: REC

DATE: NOV. 07, 2022

SHEET 35 OF 45

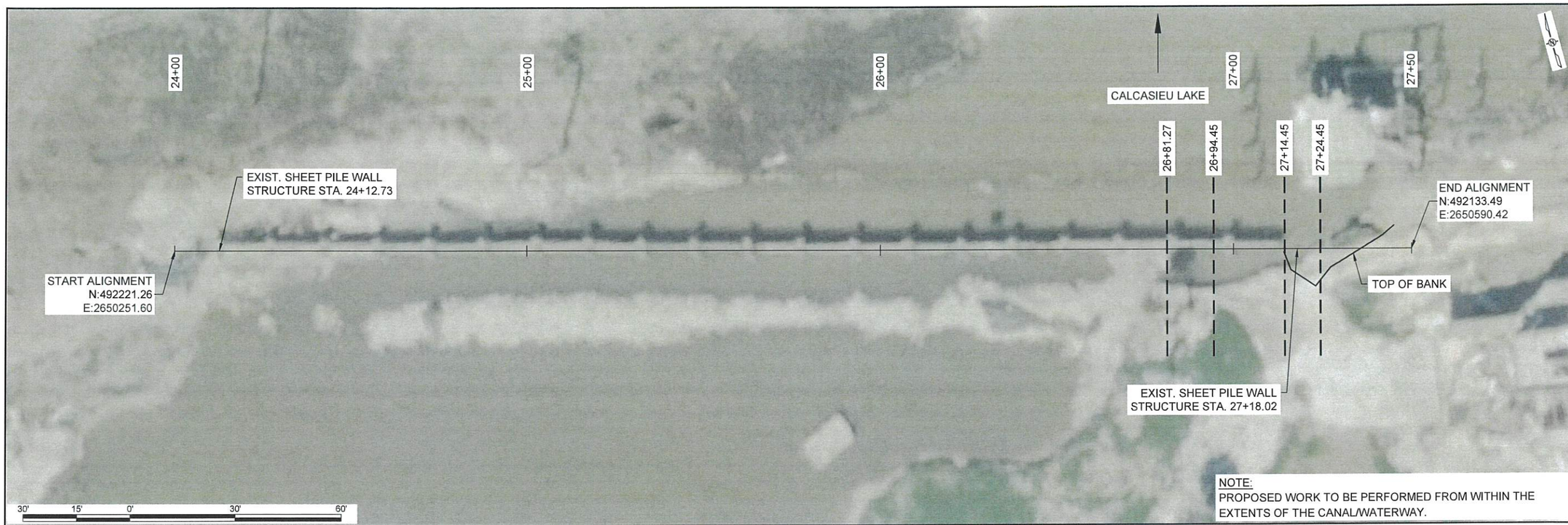

NOTE:
PROPOSED WORK TO BE PERFORMED FROM WITHIN THE EXTENTS OF THE CANAL/WATERWAY.

HORIZONTAL GRAPHIC SCALE
30' 15' 0' 30' 60'
6' 3' 0' 6' 12'
VERTICAL GRAPHIC SCALE

STATE OF LOUISIANA
BEAU J. TATE
License No. 30990
PROFESSIONAL ENGINEER
4/3/23

REV.	DATE	DESCRIPTION	BY
2	01/27/23	Final Design Drawings and Construction Plans	BB
1	11/07/22	Preliminary Design Drawings	BB

ROYAL engineering consultants
1231 Camellia Boulevard
Lafayette, Louisiana 70508

COASTAL PROTECTION AND RESTORATION AUTHORITY
150 TERRACE AVENUE
BATON ROUGE, LOUISIANA 70802

EXISTING
NO NAME BAYOU BREACH
PLAN/PROFILE

DESIGNED BY: BB
APPROVED BY: BT

CAMERON CREOLE
MAINTENANCE PROJECT
STORM DAMAGE REPAIRS

STATE PROJECT NUMBER: CS-004-A
DRAWN BY: REC

DATE: NOV. 07, 2022

SHEET 36 OF 45

NOTES:

1. PROPOSED WORK TO BE PERFORMED FROM WITHIN THE EXTENTS OF THE CANAL/WATERWAY.
2. WHERE THE PROPOSED GEOTEXTILE AND RIP RAP INSTALL IS TO BE IN CONTACT WITH THE EXISTING GRADE, THE AREA SHALL BE CLEANED AND RID OF ANY EXISTING DEBRIS, PRIOR TO INSTALLATION OF THE GEOTEXTILE AND RIP RAP.

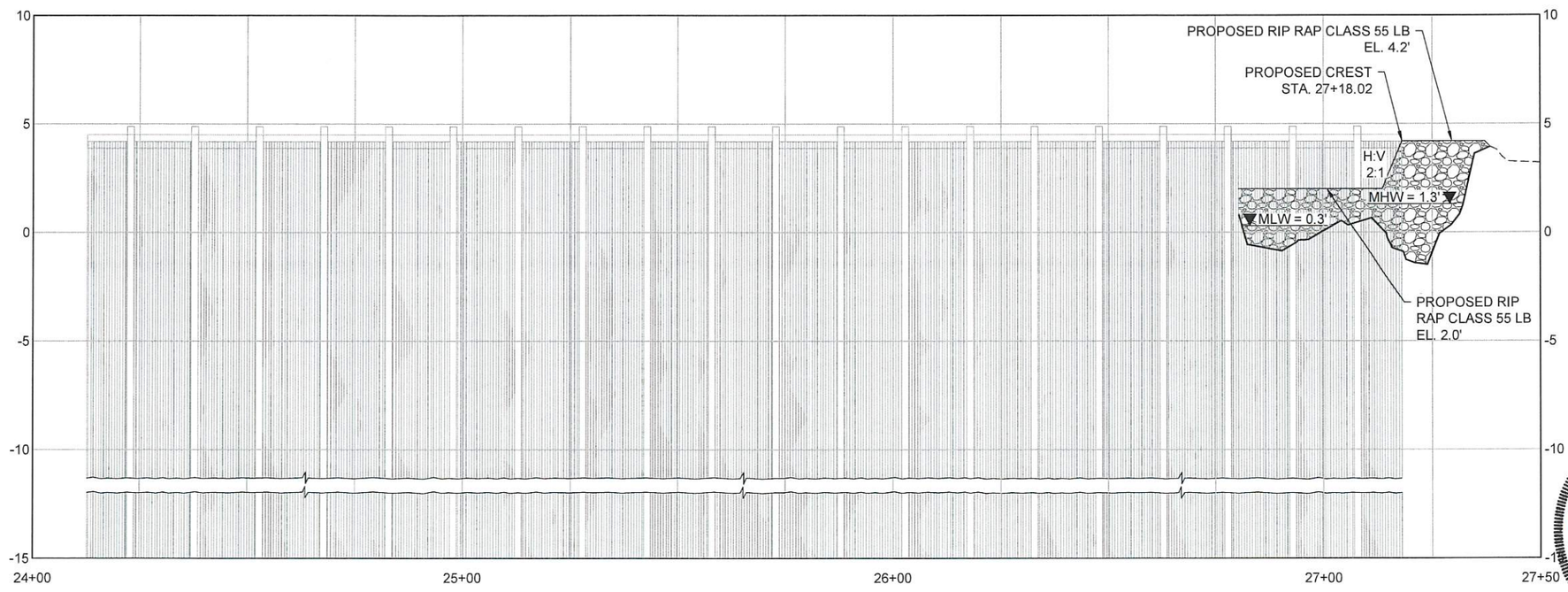

HORIZONTAL GRAPHIC SCALE
30' 15' 0' 30' 60'
6' 3' 0' 6' 12'
VERTICAL GRAPHIC SCALE

STATE OF LOUISIANA
BEAU J. TATE
License No. 30990
4/3/23
PROFESSIONAL ENGINEER

REV.	DATE	DESCRIPTION	BY
2	01/27/23	Final Design Drawings and Construction Plans	BB
1	11/07/22	Preliminary Design Drawings	BB

ROYAL engineering consultants
1231 Camellia Boulevard
Lafayette, Louisiana 70508

COASTAL PROTECTION AND RESTORATION AUTHORITY
150 TERRACE AVENUE
BATON ROUGE, LOUISIANA 70802

PROPOSED
NO NAME BAYOU BREACH
PLAN/PROFILE

DESIGNED BY: BB
APPROVED BY: BT

CAMERON CREOLE
MAINTENANCE PROJECT
STORM DAMAGE REPAIRS

STATE PROJECT NUMBER: CS-004-A
DRAWN BY: REC

DATE: NOV. 07, 2022

SHEET 37 OF 45

NOTES:

1. THE BID QUANTITY OF FILL IS BASED ON SURVEY DATA COLLECTED BY T.BAKER SMITH DURING JUNE AND JULY OF 2022. SEE SHEET 3 FOR QUANTITIES.
2. A TOP WIDTH OF 10' IS REQUIRED FOR TYPICAL RIP RAP SECTIONS UNLESS NOTED OTHERWISE.
3. WOVEN GEOTEXTILE FABRIC TO EXTEND 3' BEYOND PROPOSED FOOTPRINT OF THE RIP RAP BEFORE RIP RAP INSTALLED. NO PAY INCLUDED FOR OVERLAP OF GEOTEXTILE.
4. ELEVATION OF TIE-IN AT TOE OF ROCK WILL BE DICTATED BY SIDE-SLOPE OF ROCK UNLESS NOTED OTHERWISE.
5. EXISTING SHEET PILE WALL ELEVATION AT 4.2'
6. SIDE-SLOPE OF RIP RAP IS 3:1 H:V UNLESS NOTED OTHERWISE.
7. MEAN HIGH WATER 1.3', MEAN LOW WATER 0.3'.
8. WHERE THE PROPOSED GEOTEXTILE AND RIP RAP INSTALL IS TO BE IN CONTACT WITH THE EXISTING GRADE, THE AREA SHALL BE CLEANED AND RID OF ANY EXISTING DEBRIS, PRIOR TO INSTALLATION OF THE GEOTEXTILE AND RIP RAP.

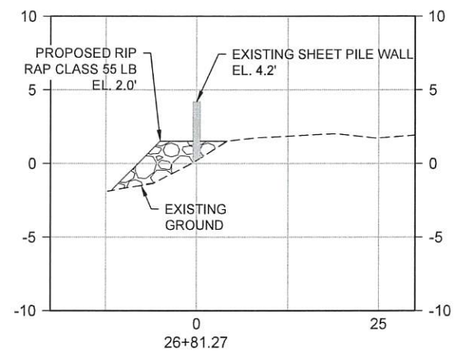

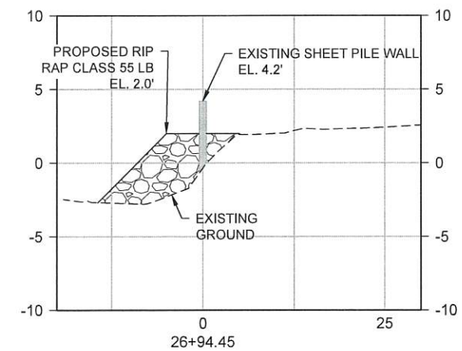

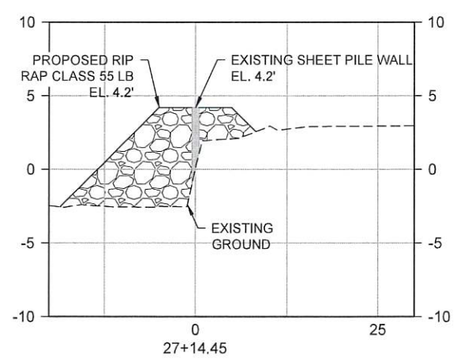

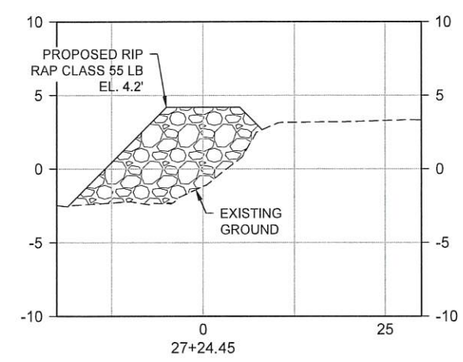

HORIZONTAL GRAPHIC SCALE
20' 10' 0' 20' 40'
10' 5' 0' 10' 20'
VERTICAL GRAPHIC SCALE

STATE OF LOUISIANA
BEAU J. TATE
License No. 30990
4/3/23
PROFESSIONAL ENGINEER

REV.	DATE	DESCRIPTION	BY
2	01/27/23	Final Design Drawings and Construction Plans	BB
1	11/07/22	Preliminary Design Drawings	BB

ROYAL engineering possibilities.
1231 Camellia Boulevard
Lafayette, Louisiana 70508

COASTAL PROTECTION AND RESTORATION AUTHORITY
150 TERRACE AVENUE
BATON ROUGE, LOUISIANA 70802

NO NAME BAYOU BREACH CROSS SECTIONS

DESIGNED BY: BB
APPROVED BY: BT

CAMERON CREOLE MAINTENANCE PROJECT STORM DAMAGE REPAIRS

STATE PROJECT NUMBER: CS-004-A
DRAWN BY: REC

DATE: NOV. 07, 2022

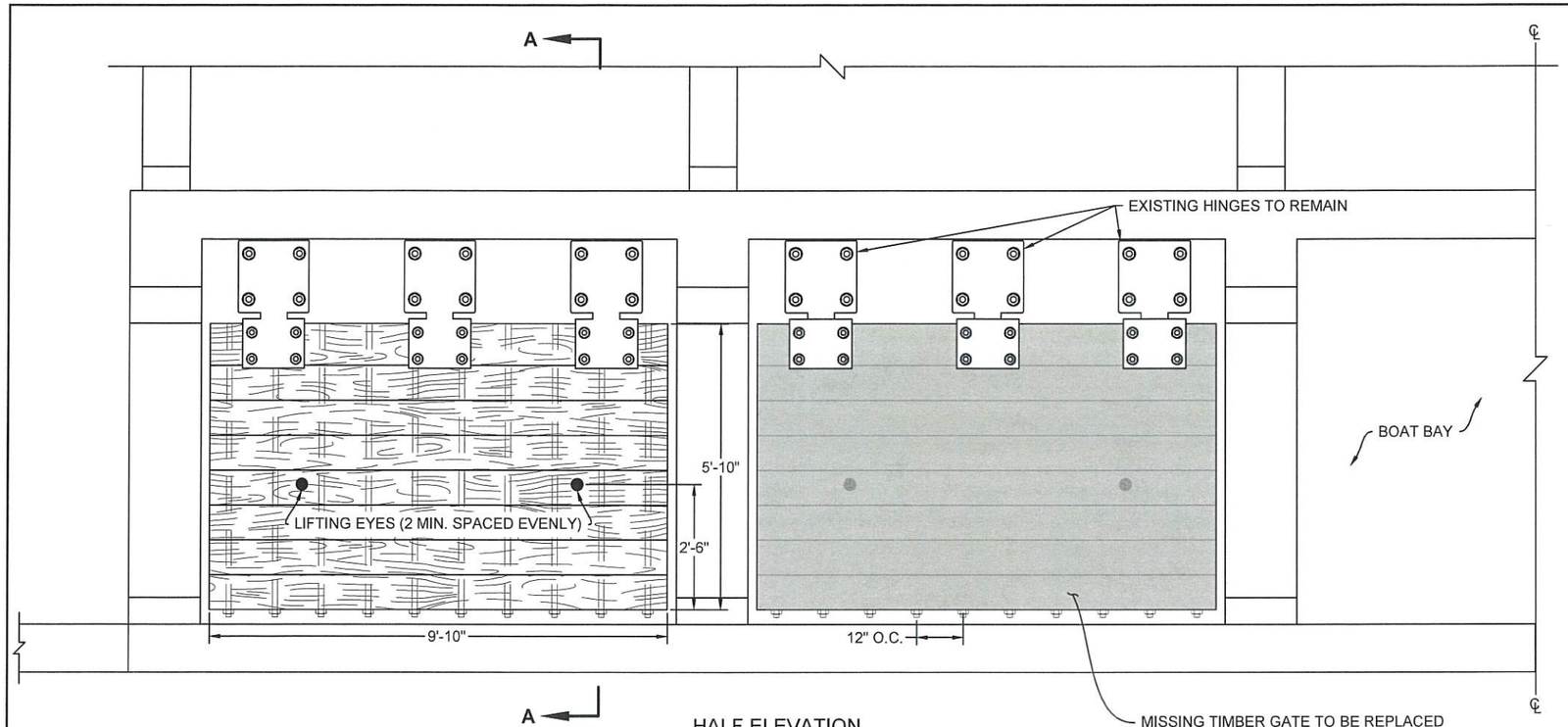

HALF ELEVATION
LAKE SIDE
(SYMMETRICAL ABOUT ℄)
NTS

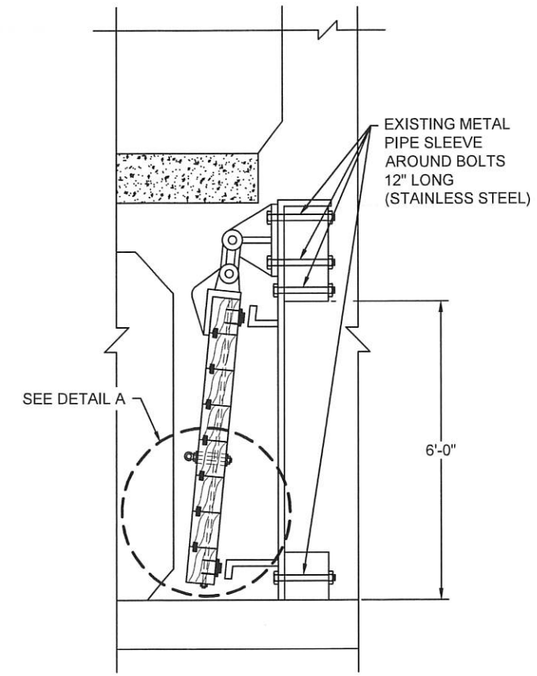

FLAP GATE - SECTION A-A
NTS

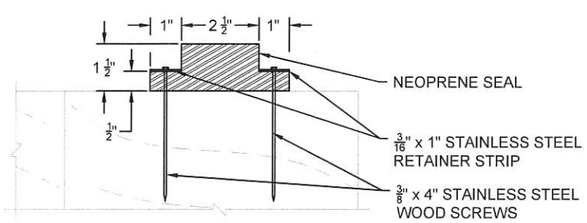

NEOPRENE SEAL AND RETAINER STRIP
NTS

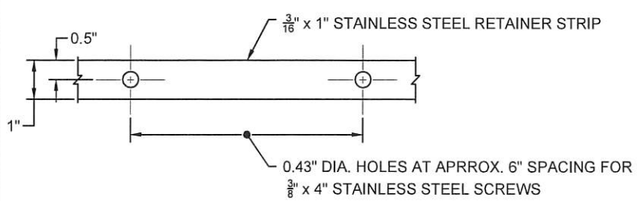

RETAINER STRIP
NTS

NOTES:

1. ONE MISSING TIMBER GATE (2ND FROM NORTH) REPLACEMENT REQUIRED FOR STRUCTURE.
2. GATE SHALL BE RODNEY HUNT TIMBER VALVE SERIES FV-T. (EXISTING FLAP VALVE OPENING IS 108" x 60".)
3. GATE SHALL BE FABRICATED FROM SOUTHERN YELLOW PINE, STRUCTURAL 65.
4. 4 SIDES GATE OPENING TO BE ROUNDED.
5. GATE SHALL HAVE A MIN. OF TWO LIFTING EYES AS SHOWN IN DETAIL SPACED EQUALLY.
6. CONTRACTOR TO REPLACE ANY DAMAGED OR CORRODED FASTENERS WITH TYPE 316 STAINLESS STEEL FASTENERS OF EQUIVALENT SIZE AND STRENGTH OF EXISTING.
7. SEAL TO COMPLETELY ENCIRCLE THE VALVE OPENING AND FASTENED TO THE TIMBER GATE WITH 3/16" x 1" STAINLESS STEEL RETAINER STRIPS AND 3/8" x 4" STAINLESS STEEL WOOD SCREWS AT 6" SPACING.
8. TIE RODS SHALL BE 3/4" TYPE 316 STAINLESS STEEL SPACED AT 12" CENTER TO CENTER.

STATE OF LOUISIANA
BEAU J. TATE
License No. 30990
4/3/23
PROFESSIONAL ENGINEER

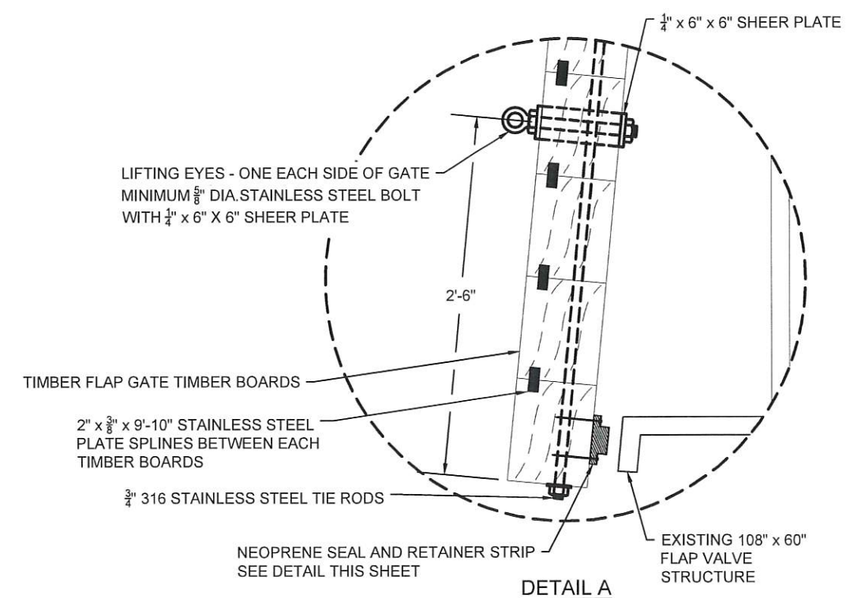

DETAIL A
NTS

REV.	DATE	DESCRIPTION	BY
2	01/27/23	Final Design Drawings and Construction Plans	BB
1	11/07/22	Preliminary Design Drawings	BB

ROYAL engineering possibilities.
1231 Camellia Boulevard
Lafayette, Louisiana 70508

COASTAL PROTECTION AND RESTORATION AUTHORITY
150 TERRACE AVENUE
BATON ROUGE, LOUISIANA 70802

GRAND BAYOU FLAP GATE REPAIR DETAILS

DESIGNED BY: BB
APPROVED BY: BT

CAMERON CREOLE MAINTENANCE PROJECT STORM DAMAGE REPAIRS

STATE PROJECT NUMBER: CS-004-A
DRAWN BY: REC

DATE: NOV. 07, 2022

SHEET 39 OF 45

REPLACE (8) 3" x 6" x 10'-6" WOODEN STOP LOGS ON ALL FOUR DROP GATES

NOTE:
(8) 3" x 6" x 10'-6" WOODEN STOP LOGS, STRUCTURAL 65 WOODEN PINE TREATED TO BE REPLACED AT EACH SLUICE GATE. THESE LOGS ARE ATTACHED TO THE GATE BY SCREWING THE PRESSURE PLATE DOWN.

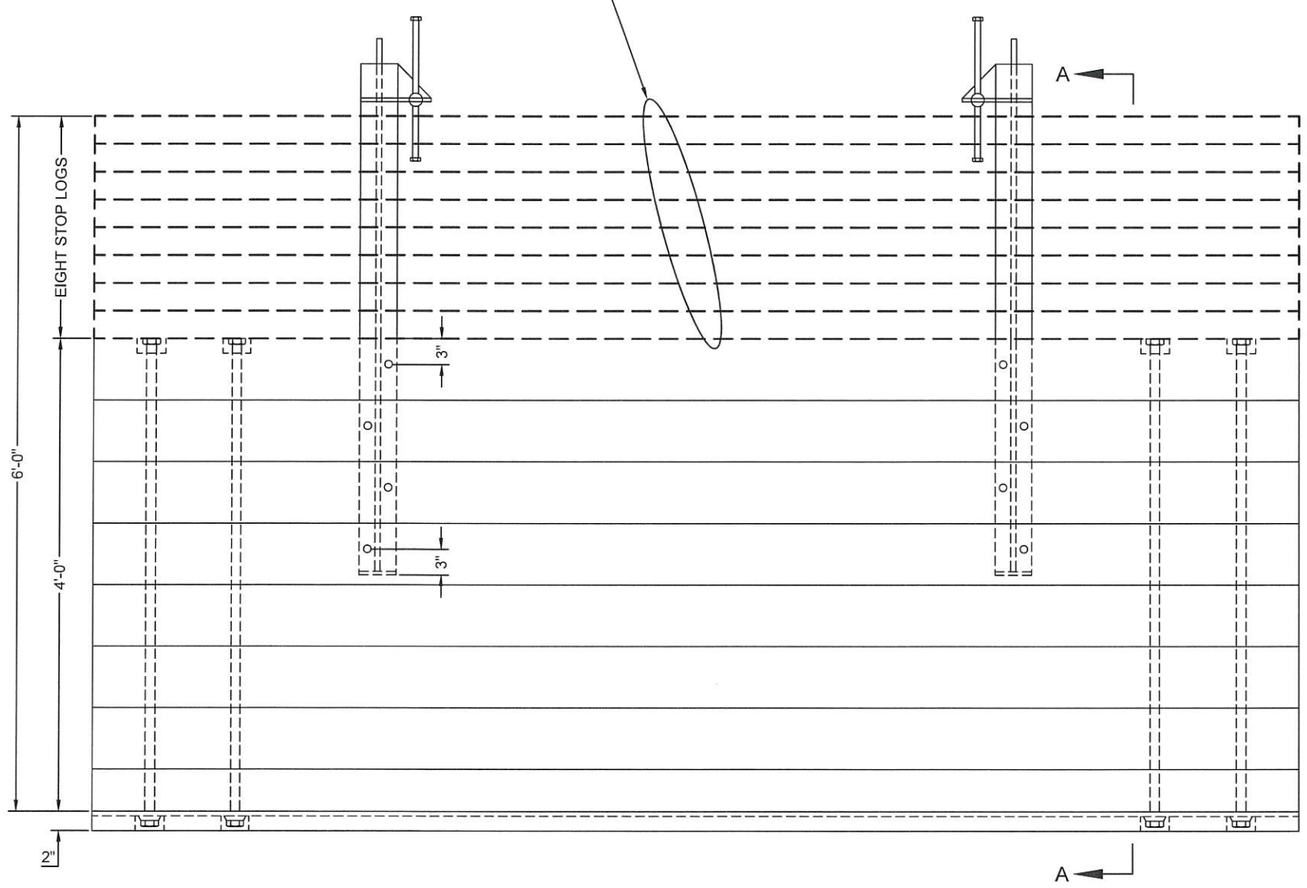

ELEVATION
NTS

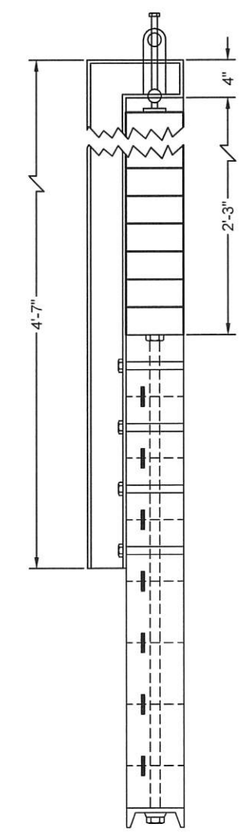

SECTION A-A
NTS

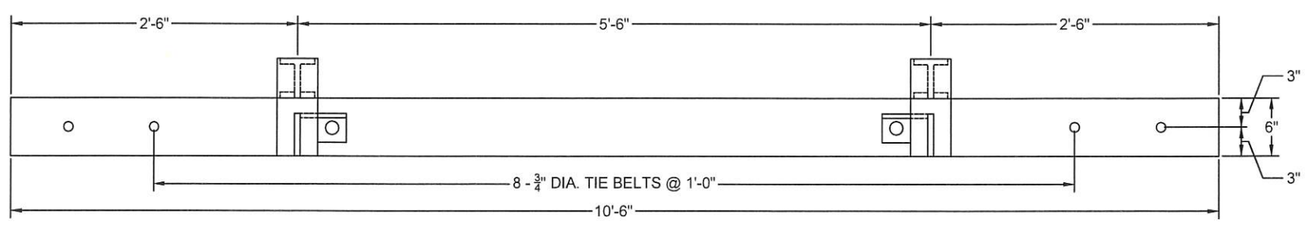

PLAN
NTS

STATE OF LOUISIANA
BEAU J. TATE
License No. 30990
4/3/23
PROFESSIONAL ENGINEER

REV.	DATE	DESCRIPTION	BY
2	01/27/23	Final Design Drawings and Construction Plans	BB
1	11/07/22	Preliminary Design Drawings	BB

ROYAL engineering consultants
1231 Camellia Boulevard
Lafayette, Louisiana 70508

COASTAL PROTECTION AND RESTORATION AUTHORITY
150 TERRACE AVENUE
BATON ROUGE, LOUISIANA 70802

GRAND BAYOU SLUICE / DROP GATE REPAIR DETAILS

DESIGNED BY: BB
APPROVED BY: BT

CAMERON CREOLE MAINTENANCE PROJECT
STORM DAMAGE REPAIRS

STATE PROJECT NUMBER: CS-004-A
DRAWN BY: REC

DATE: NOV. 07, 2022

SHEET 40 OF 45

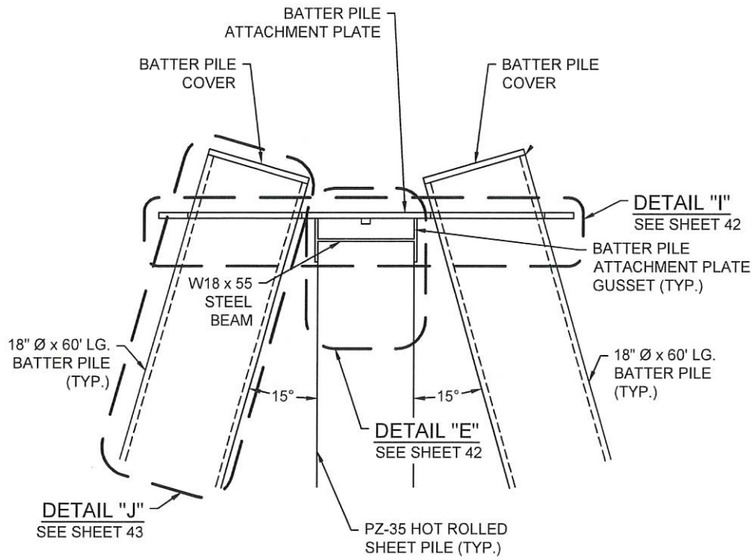

DETAIL "A"
SHEET PILE WALL ASSEMBLY DETAIL
NTS

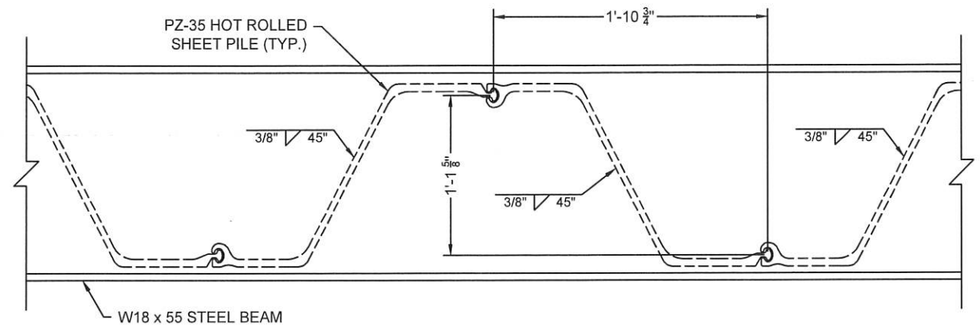

DETAIL "B"
W18 x 55 BEAM TO SHEET PILE WALL PLAN VIEW
NTS

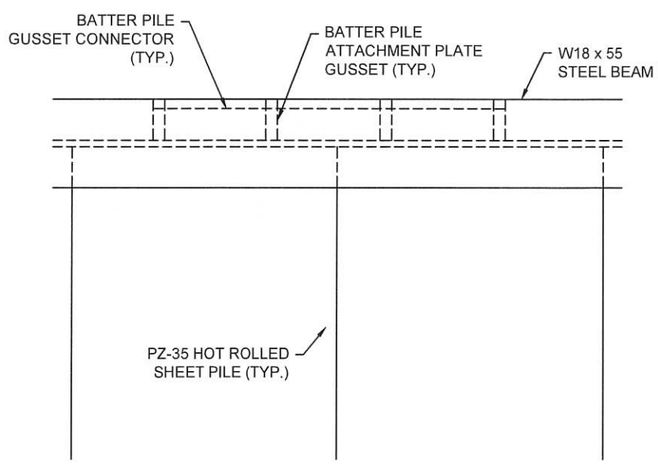

DETAIL "C"
W18 x 55 BEAM TO SHEET PILE ELEVATION VIEW
(BATTER PILE PLATES AND BATTER PILE HAVE BEEN OMITTED FOR CLARITY)
NTS

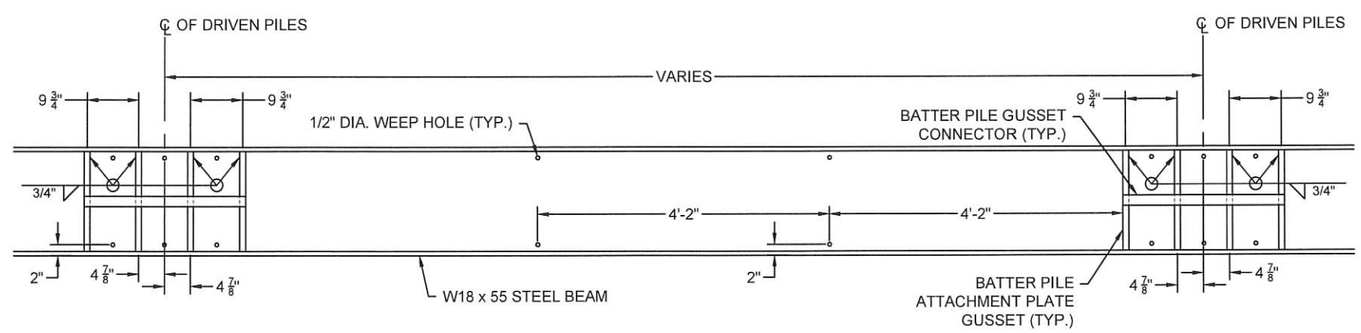

DETAIL "D"
W18 x 55 BEAM TO BATTER PILE PLATE GUSSET DETAIL
(SHEET PILE WALL,BATTER PILE PLATES AND BATTER PILE HAVE BEEN OMITTED FOR CLARITY)
NTS

NOTE:
1. THE SURFACE OF EACH STEEL PILE, STEEL SHEET PILE, STEEL W-BEAM, AND ALL ASSOCIATED CAPS AND CONNECTIONS SHALL BE CLEANED, PRIMED, AND COATED USING TWO (2) COATS OF COAL TAR EPOXY-POLYAMIDE FROM THE TOP OF THE COMPONENT TO A POINT 10 FEET BELOW THE MUDLINE AND SHALL CONFORM TO ALL OTHER REQUIREMENTS SPECIFIED IN THE TECHNICAL SPECIFICATIONS SECTION TS-980.6.

STATE OF LOUISIANA
BEAU J. TATE
License No. 30990
PROFESSIONAL ENGINEER
4/3/23

REV.	DATE	DESCRIPTION	BY
2	01/27/23	Final Design Drawings and Construction Plans	BB
1	11/07/22	Preliminary Design Drawings	BB

ROYAL engineering consultants
1231 Camellia Boulevard
Lafayette, Louisiana 70508

COASTAL PROTECTION AND RESTORATION AUTHORITY
150 TERRACE AVENUE
BATON ROUGE, LOUISIANA 70802

STEEL SHEET AND BATTER PILE ASSEMBLY DETAILS

DESIGNED BY: BB
APPROVED BY: BT

CAMERON CREOLE MAINTENANCE PROJECT STORM DAMAGE REPAIRS

STATE PROJECT NUMBER: CS-004-A
DRAWN BY: REC

DATE: NOV. 07, 2022

SHEET 41 OF 45

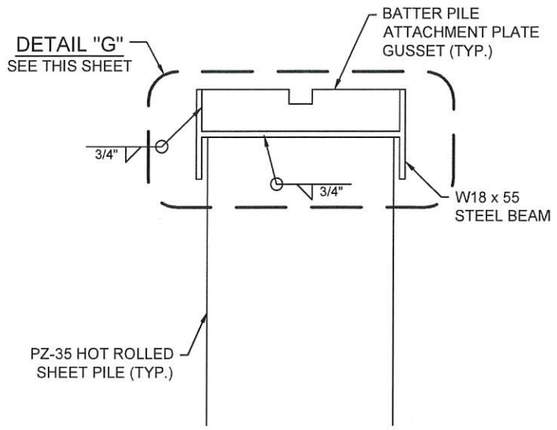

DETAIL "E"
W18 x 55 BEAM TO GUSSETS
(BATTER PILE GUSSET CONNECTOR, AND BATTER PILE PLATES
HAVE BEEN OMITTED FOR CLARITY)
NTS

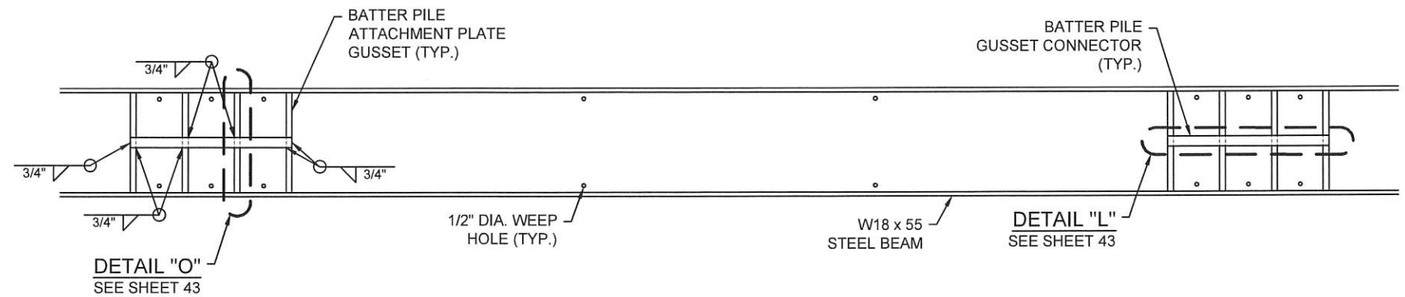

DETAIL "F"
BATTER PILE PLATE GUSSET TO CONNECTOR DETAIL
(SHEET PILE WALL, BATTER PILE PLATES AND BATTER PILES
HAVE BEEN OMITTED FOR CLARITY)
NTS

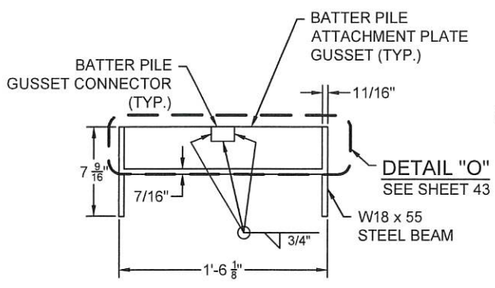

DETAIL "G"
BATTER PILE PLATE GUSSET TO CONNECTOR DETAIL
(SHEET PILE WALL, BATTER PILE PLATES AND BATTER PILES
HAVE BEEN OMITTED FOR CLARITY)
NTS

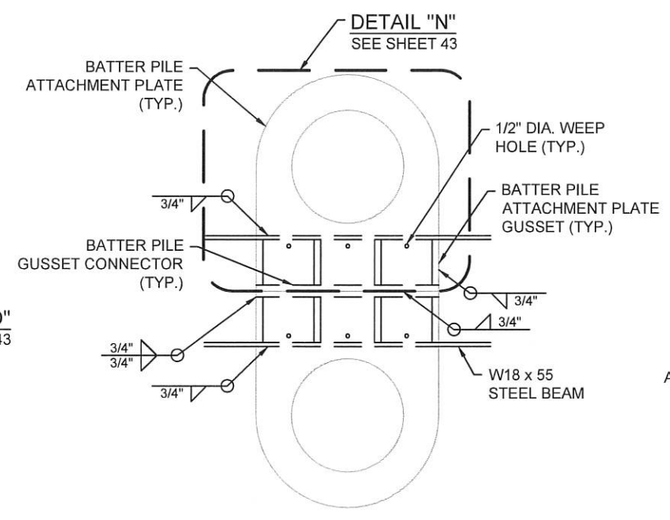

DETAIL "H"
W18 x 55 BEAM TO BATTER PILE PLATE AND GUSSETS
NTS

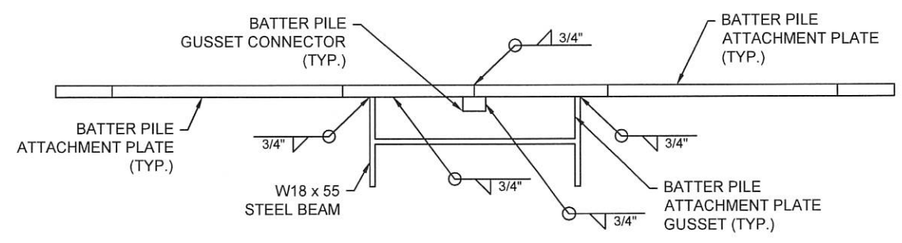

DETAIL "I"
BATTER PILE PLATE TO GUSSETS, CONNECTOR, AND W18 x 55 BEAM
(SHEET PILE WALL, BATTER PILE PLATES AND BATTER PILES
HAVE BEEN OMITTED FOR CLARITY)
NTS

NOTE:
1. THE SURFACE OF EACH STEEL PILE, STEEL SHEET PILE, STEEL W-BEAM, AND ALL ASSOCIATED CAPS AND CONNECTIONS SHALL BE CLEANED, PRIMED, AND COATED USING TWO (2) COATS OF COAL TAR EPOXY-POLYAMIDE FROM THE TOP OF THE COMPONENT TO A POINT 10 FEET BELOW THE MUDLINE AND SHALL CONFORM TO ALL OTHER REQUIREMENTS SPECIFIED IN THE TECHNICAL SPECIFICATIONS SECTION TS-980.6.

STATE OF LOUISIANA
BEAU J. TATE
License No. 30990
4/3/23
PROFESSIONAL ENGINEER

REV.	DATE	DESCRIPTION	BY
2	01/27/23	Final Design Drawings and Construction Plans	BB
1	11/07/22	Preliminary Design Drawings	BB

ROYAL engineering possibilities.
1231 Camellia Boulevard
Lafayette, Louisiana 70508

COASTAL PROTECTION AND RESTORATION AUTHORITY
150 TERRACE AVENUE
BATON ROUGE, LOUISIANA 70802

STEEL SHEET AND BATTER PILE ASSEMBLY DETAILS

DESIGNED BY: BB
APPROVED BY: BT

CAMERON CREOLE MAINTENANCE PROJECT
STORM DAMAGE REPAIRS

STATE PROJECT NUMBER: CS-004-A
DRAWN BY: REC

DATE: NOV. 07, 2022

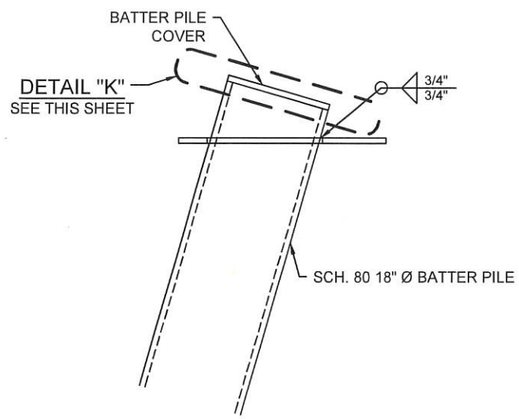

DETAIL "J"
BATTER PILE ATTACHMENT PLATE DETAIL
(SHEET PILE WALL, W18x35 BEAM, AND BATTER PILE PLATE GUSSETS HAVE BEEN OMITTED FOR CLARITY)
NTS

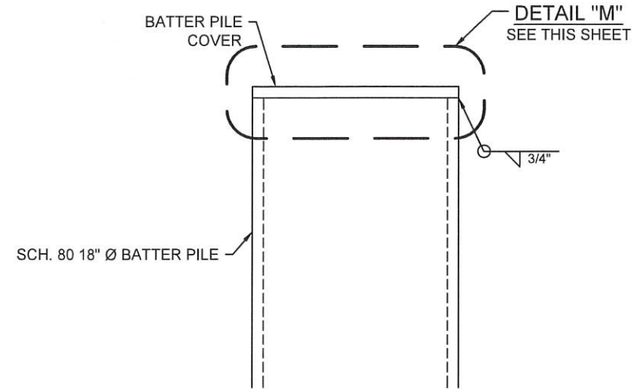

DETAIL "K"
BATTER PILE COVER ATTACHMENT DETAIL
NTS

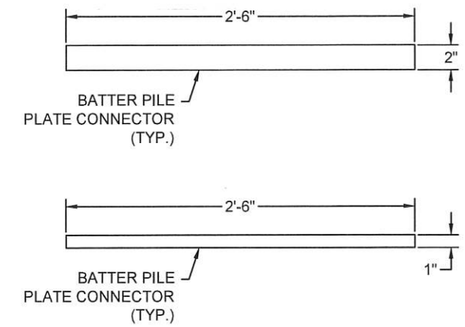

DETAIL "L"
BATTER PILE GUSSET CONNECTOR DETAIL
(ALL BATTER PILE COVERS WILL BE FABRICATED USING ROLLED 1 INCH THICK PLATE CONFORMING TO ASTM A-36)
NTS

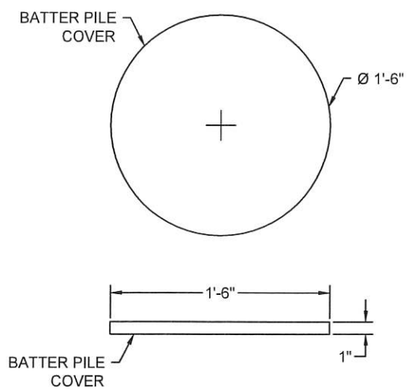

DETAIL "M"
BATTER PILE COVER PLATE DETAIL
(ALL BATTER PILE COVERS WILL BE FABRICATED USING ROLLED 1 INCH THICK PLATE CONFORMING TO ASTM A-36)
NTS

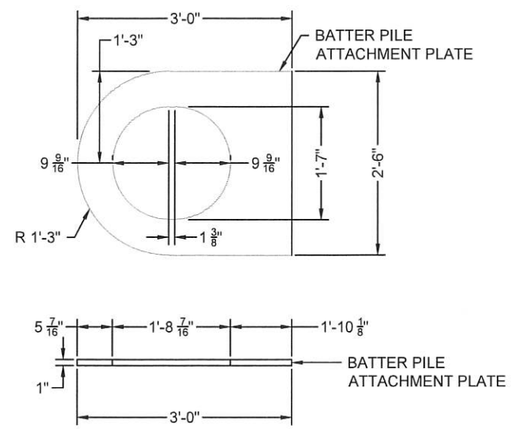

DETAIL "N"
BATTER PILE PLATE DETAIL
(ALL BATTER PILE PLATES WILL BE FABRICATED USING ROLLED 1 INCH THICK PLATE CONFORMING TO ASTM A-36)
NTS

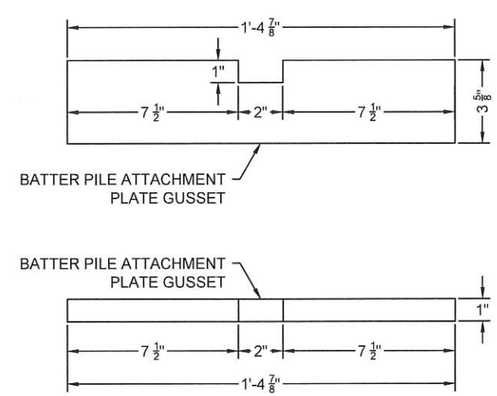

DETAIL "O"
BATTER PILE PLATE GUSSET DETAIL
(ALL BATTER PILE COVERS WILL BE FABRICATED USING ROLLED 1 INCH THICK PLATE CONFORMING TO ASTM A-36)
NTS

NOTE:
1. THE SURFACE OF EACH STEEL PILE, STEEL SHEET PILE, STEEL W-BEAM, AND ALL ASSOCIATED CAPS AND CONNECTIONS SHALL BE CLEANED, PRIMED, AND COATED USING TWO (2) COATS OF COAL TAR EPOXY-POLYAMIDE FROM THE TOP OF THE COMPONENT TO A POINT 10 FEET BELOW THE MUDLINE AND SHALL CONFORM TO ALL OTHER REQUIREMENTS SPECIFIED IN THE TECHNICAL SPECIFICATIONS SECTION TS-980.6.

STATE OF LOUISIANA
BEAU J. TATE
License No. 30990
4/3/23
PROFESSIONAL ENGINEER

REV.	DATE	DESCRIPTION	BY
2	01/27/23	Final Design Drawings and Construction Plans	BB
1	11/07/22	Preliminary Design Drawings	BB

ROYAL engineering&consultants
1231 Camellia Boulevard
Lafayette, Louisiana 70508

COASTAL PROTECTION AND RESTORATION AUTHORITY
150 TERRACE AVENUE
BATON ROUGE, LOUISIANA 70802

STEEL SHEET AND BATTER PILE ASSEMBLY DETAILS

DESIGNED BY: BB
APPROVED BY: BT

CAMERON CREOLE MAINTENANCE PROJECT
STORM DAMAGE REPAIRS

STATE PROJECT NUMBER: CS-004-A
DRAWN BY: REC

DATE: NOV. 07, 2022

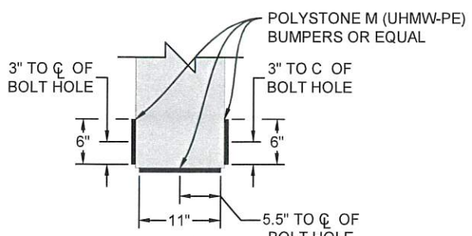

PLAN

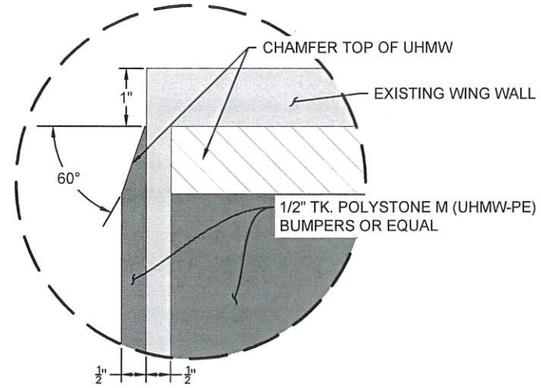

CHAMFER DETAIL
NTS

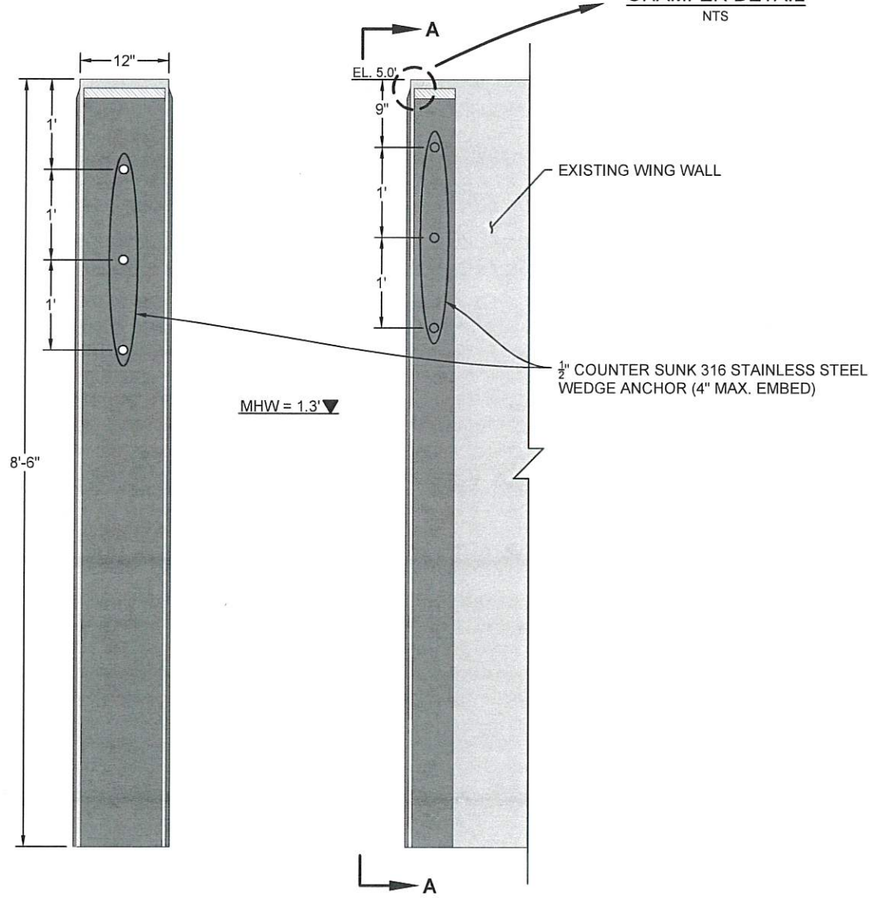

A - A

ELEVATION

BUMPER DETAIL
NTS

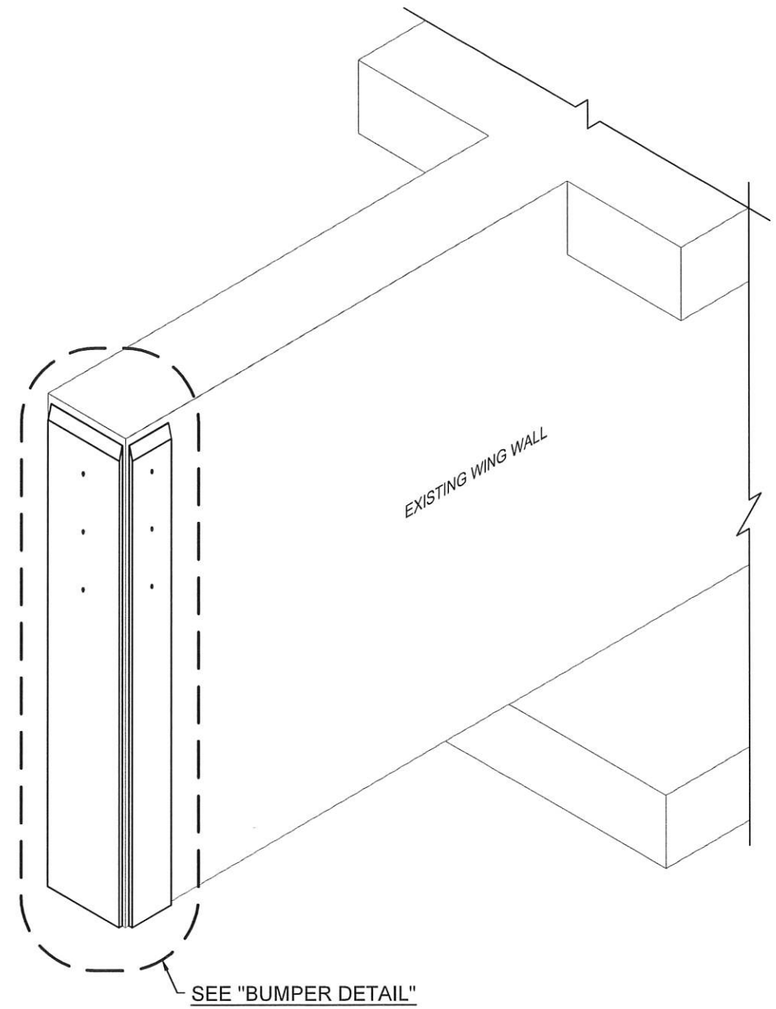

LAMBERT BAYOU WCS WEST-SIDE WING WALL
BUMPER ATTACHMENT ISO
NTS

STATE OF LOUISIANA
BEAU J. TATE
License No. 30990
4/3/23
PROFESSIONAL ENGINEER

REV.	DATE	DESCRIPTION	BY
2	01/27/23	Final Design Drawings and Construction Plans	BB
1	11/07/22	Preliminary Design Drawings	BB

ROYAL engineering consultants
1231 Camellia Boulevard
Lafayette, Louisiana 70508

COASTAL PROTECTION AND RESTORATION AUTHORITY
150 TERRACE AVENUE
BATON ROUGE, LOUISIANA 70802

LAMBERT BAYOU WCS WEST-SIDE BUMPER DETAIL

DESIGNED BY: BB
APPROVED BY: BT

CAMERON CREOLE MAINTENANCE PROJECT STORM DAMAGE REPAIRS

STATE PROJECT NUMBER: CS-004-A
DRAWN BY: REC

DATE: NOV. 07, 2022

SHEET 44 OF 45

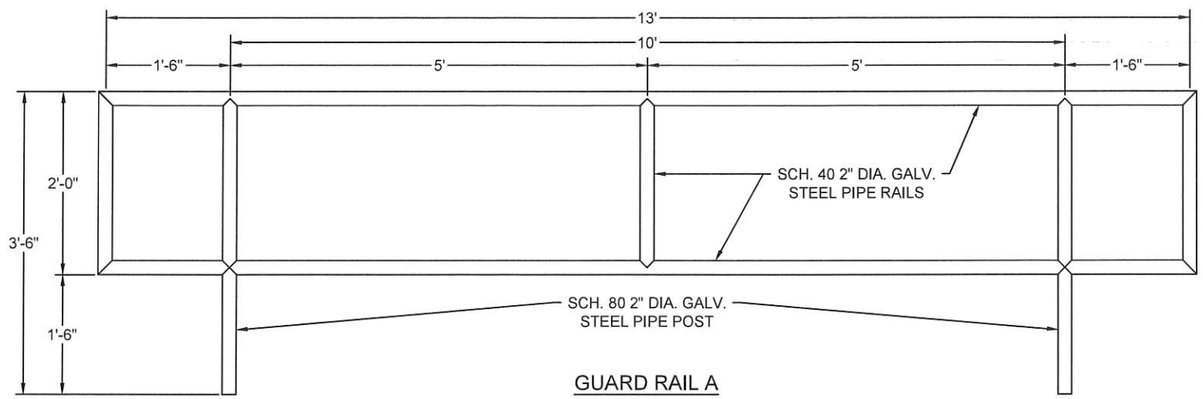

GUARD RAIL A
NTS

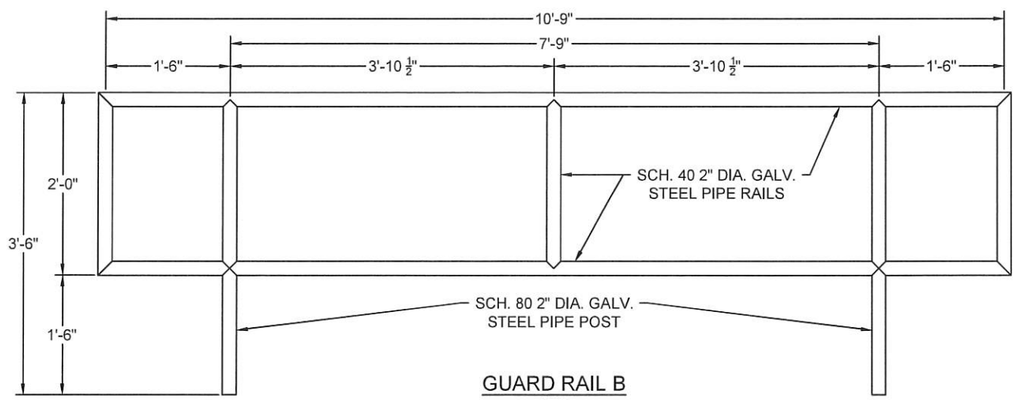

GUARD RAIL B
NTS

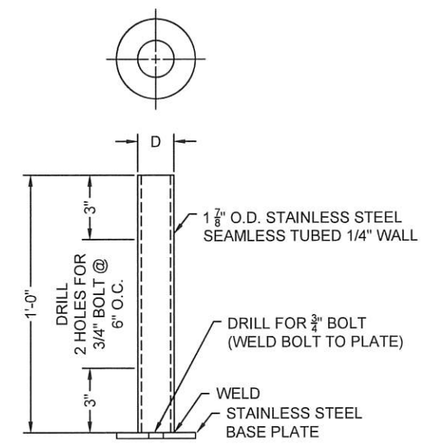

DETAIL POST ANCHOR
NTS

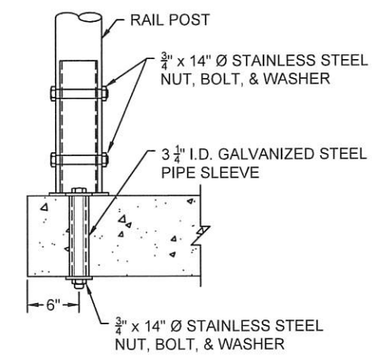

GUARD RAIL POST
ANCHOR ASSEMBLY
NTS

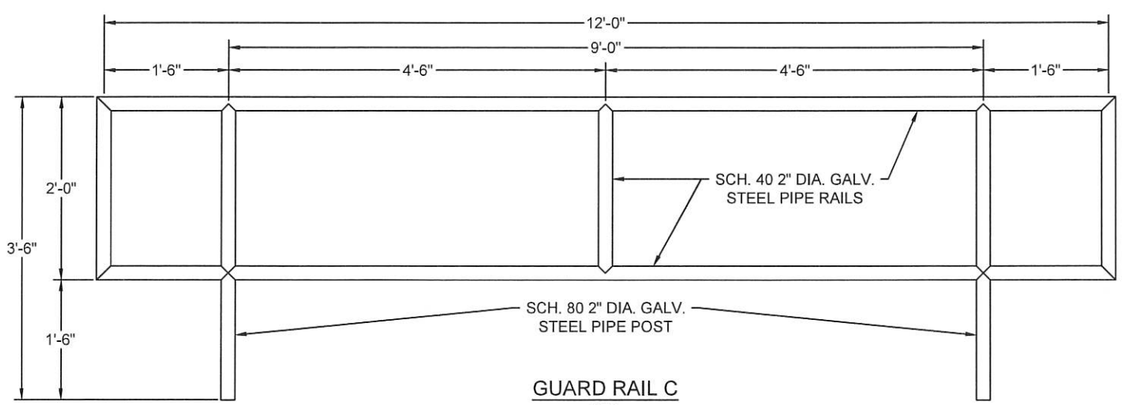

GUARD RAIL C
NTS

NOTE:

1. CONTRACTOR SHALL DETERMINE THE APPLICABILITY OF GUARD RAIL DETAILS A, B, AND C BASED UPON HIS/HER FIELD VERIFICATION OF THE PRE-EXISTING ANCHOR POST SPACING FOR THE SPECIFIC GAURD RAIL SECTIONS CALLED OUT FOR REPLACEMENT ON SHEETS 23, 30, AND 35.

STATE OF LOUISIANA
BEAU J. TATE
License No. 30990
4/3/23
PROFESSIONAL ENGINEER

REV.	DATE	DESCRIPTION	BY
2	01/27/23	Final Design Drawings and Construction Plans	BB
1	11/07/22	Preliminary Design Drawings	BB

ROYAL engineering consultants
1231 Camellia Boulevard
Lafayette, Louisiana 70508

COASTAL PROTECTION AND RESTORATION AUTHORITY
150 TERRACE AVENUE
BATON ROUGE, LOUISIANA 70802

GUARD RAIL AND ANCHOR BRACKET DETAILS

DESIGNED BY: BB
APPROVED BY: BT

CAMERON CREOLE MAINTENANCE PROJECT STORM DAMAGE REPAIRS

STATE PROJECT NUMBER: CS-004-A
DRAWN BY: REC

DATE: NOV. 07, 2022